COMPATIBLE MOTOR DIMENSIONS							
A	B	C	D	E	F	H	L
≦14	50	≦36	≦3	70	5.1~6.0	60~80	≧C-3

※BUSHING WILL BE SUPPLIED WHEN THE MOTOR SHAFT DIAMETER IS SMALLER THAN 14

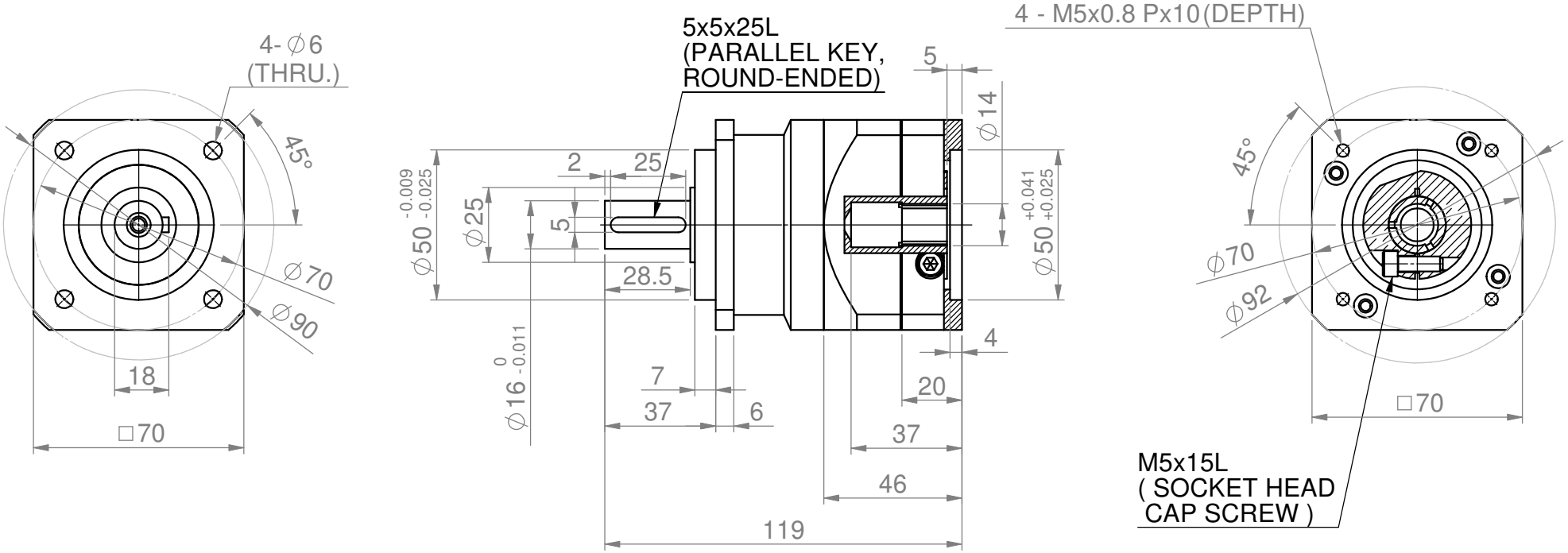

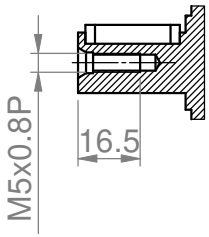

ADAPTER PART NO.
234B022217

SPECIFICATIONS ARE SUBJECT TO CHANGE WITHOUT PRIOR NOTICE

Unit	mm	Model Name	PGE/PEE70 1 STAGE	SESAME MOTOR CORP.
Project		Drawing No.	3D2XS.050070.021	