SESAME

Sesame Motor Corp., A leading brand in gear technology.

PLANETARY GEARHEADS

行星式減速機

100%

Made in Taiwan

www.sesamemotor.com

ISO 9001 ISO 14001

SESAME®

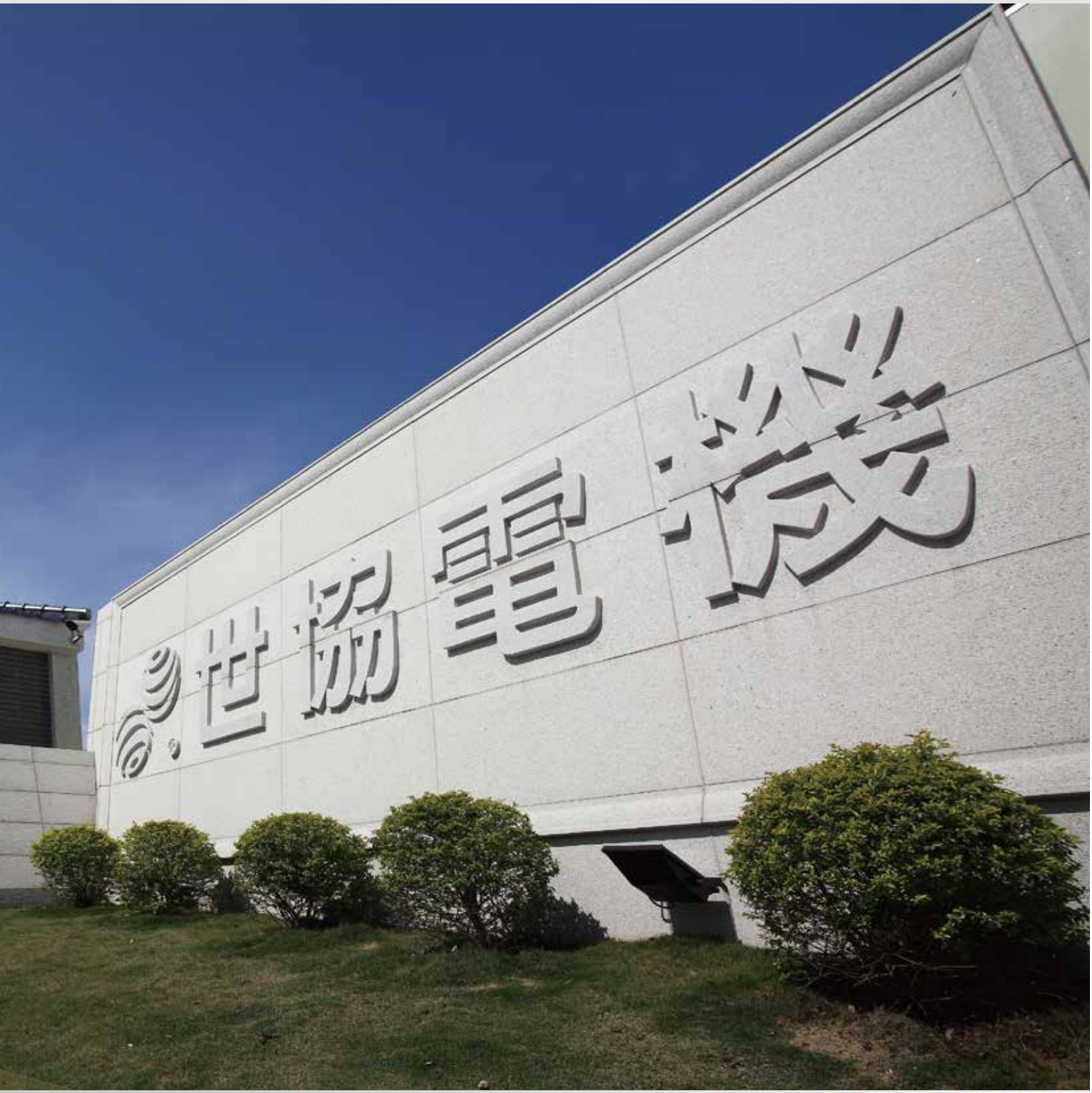

TABLE OF CONTENTS 目 錄

SESAME MOTOR 世協電機

PLANETARY GEARHEADS 行星式減速機

PREMIUM TYPE 極精密斜齒型

PRECISION ADVANCED TYPE / PRECISION TYPE 精密斜齒型/精密型

STANDARD TYPE 標準型

PRIMARY TYPE 泛用型

SESAME®

Company Profile 公司簡介

"SESAME MOTOR CORP." founded in 1990, have nearly 30 years of professional motor and gearbox manufacturing and sales experience. Sesame Motor's 7000 square meters factory locates at Taichung City. Adding modern workshop facilities with the effective integration of ERP systems, purchase world class processing and testing equipment; as we continuously enhance key parts' productivity we had not only expending overall productivity, shorten delivery, and ensure products' quality to achieve customer satisfaction. SESAME MOTOR products have received unanimous praise.

科技與口碑結合的領先品牌　減速機與馬達專業製造廠

「世協電機股份有限公司」成立於1990年，有將近30年專業馬達及減速機製造銷售經驗，廠房位於台中市神岡區，佔地約7000m²；現代化廠房設施加上ERP系統的有效整合，以及不斷增添國外頂級加工及檢驗設備，提升關鍵零件自製能力，不僅擴大產能，增快交貨速度、品質更能達到顧客滿意，讓世協電機產品受到使用者一致的好評。

Quality Policy：

"Honesty", to provide integrity and pragmatic services
"Creativity", to create customer competitive advantage
"Positivity", positive support and responsibility
"Innovation", moving forward of technical innovation

品質政策：

"誠" 信務實
"創" 造客戶優勢競爭力
"積" 極負責的工作效率
"精" 益求精的專業技術

Environmental Policy：

Full participation to comply with eco-regulation
Prevent pollution; save energy and reduce waste
Keep improving and propagating Green Concept

環境政策：

全員參與，遵守環保法規
預防污染，節能降耗減廢
持續改進，傳播綠色精神

"SESAME MOTOR" is built base on spirit of "customer satisfaction, priorty service" philosophy, providing three privileges "best quality, fastest delivery, and best sale service". Our products have obtained high market share in Taiwan, that had lead "SESAME MOTOR" be a well-known brand. In addition to our official branch in Shanghai, we have agents in the United States, Germany, Denmark, Poland, UK, Turkey, Russia, Korea, Japan, China, Thailand, Malaysia and India. Trademark registered in major countries all over the world.

"SESAME MOTOR" has been successively obtained CE, CCC, UL, ISO9001 and ISO14001 certification and honorary awards."SESAME MOTOR" also has a professional R & D team and experienced production-related sectors; can provide high accuracy products for different customer needs; high-quality servo gearhead and the surrounding transmission components, develop and produce other kinds of gear; customized motor products. All Sesame products are 100% Made in Taiwan,including raw material, development, design, machining and assembly, to offer the best solutions with detailed-oriented, high precision, high efficiency and low noise properties. Product will be used in tool machines, industrial robots, semiconductor devices, aircraft industrial, medical and rehabilitation equipment, electric scooter, auto storage devices, green energy-related industries, testing and food machinery, bakery equipment, packaging machinery and agricultural equipment and other sophisticated automation equipment.

「世協電機」本著「顧客滿意、服務至上」的理念，提供「最佳品質、最快交期、最快售服」的三最服務，在台灣為具高市佔率之知名品牌，除了在中國上海設有分公司，另在美國、德國、丹麥、波蘭、英國、土耳其、俄羅斯、韓國、日本、中國、泰國、馬來西亞、印度...等國設有總代理，同時在世界各重要國家取得商標註冊。

「世協電機」已先後取得CE、CCC、UL產品認證與ISO9001及ISO14001驗證等榮譽同時擁有專業的研發團隊、經驗豐富的生產相關部門；可針對不同客戶需求提供高精度、高品質的行星式減速機及周邊傳動機構，研發、生產各式減速機及馬達等客製化產品。從原物料來源、研發、設計、加工、製造等所有生產過程，100%台灣製造！產品具備細緻化、精度高、噪音低、高效率等優良品質特性，廣泛應用於工具機械、產業機器人、半導體設備、航太工業、醫療復健設備、電動代步車、自動倉儲設備、綠能相關產業、檢驗儀器、食品機械、包裝機械及農業設備等各種精密自動化設備中。

SESAME®

Vision

“SESAME MOTOR” strong operating team adhere to the blue ocean strategy of entering the international market and high-tech field, to create the future more professional, better quality of sustainable management systems, establishment of “a combination of leading technology and brand reputation” for competitive advantage.

Mission

We adhere to three product principles of "technology, environmental protection, innovation", as entering the era of Industry 4.0, providing contribution to precision automation equipment in various fields.

Business Philosophy

Corporate Culture

“SESAME MOTOR” continuously providing quality products and best services; with “Honesty” for providing integrity and pragmatic service; with “Creativity” given customer advantage competitiveness; with "Positivity" to support and responsible for the efficiency of productivity; with "Innovation" on profession and knowledge of knowhow. Taking into account environment protection, employee welfare and sustainable management, we aim to become the first market trend indicators.

Quality Products

We offer premium performance planetary gearboxes, gear motors and customized products with a strong R&D team.

Priority Service

“SESAME MOTOR” is moving forward to globalization based on spirit of “customer satisfaction, priority service” philosophy, providing three privileges “best quality, fastest delivery, and best sale service”.

願景

『世協電機』堅強之經營團隊秉持邁向國際化及高科技化之藍海策略，營造更專業化、更優質化的永續經營體系，在智慧化製造趨勢中，建立『科技與口碑結合的領導品牌』。

使命與價值

『世協電機』產品堅持追求「科技、環保、創新」三原則，躋身工業4.0之智慧化生產時代，為各領域精密自動化設備提供最具體之貢獻。

經營理念

企業文化

『世協電機』本著『誠』信務實、『創』造客戶優勢競爭力、『積』極負責的工作精神、『精』益求精的專業技術等四大經營理念，提供優質產品與最佳服務，兼顧綠色環保、員工福祉及永續經營，致力成為標竿企業。

優質產品

『世協電機』提供最高品質的精密行星式減速機及馬達，並以堅強的研發團隊為客戶提供少量多樣化的客製化產品。

最佳服務

『世協電機』本著「顧客滿意、服務至上」的理念，提供「最佳品質、最快交期、最好售服」的三最服務特色，朝向全球化目標邁進。

Trade Mark & Certification 認證與商標

CE Certification

UL Certification

ISO 9001:2015

ISO 14001:2015

China Compulsory Certification (CCC)

Gearhead PHL Series China SIPO Patent

ISO 9001

GCL INTERNATIONAL UKAS ISO 9001 5965

Registration Number : 8580921716

ISO 14001

GCL INTERNATIONAL UKAS ISO 14001 5965

Registration Number : 38E08580

ROHS SESAME MOTOR CORP.

c UL us Cert.No.E209009

美國、加拿大、歐盟、中國、台灣、日本、韓國、伊朗、菲律賓、越南、印尼、馬來西亞、新加坡等地區商標註冊

The United States, Canada, European Union, China, Taiwan, Japan, Korea, Iran, The Philippines, Vietnam, Indonesia, Malaysia, Singapore ...etc. trade mark certifications.

SESAME®

Corporate Environment 公司環境







Production Line 生產線

行星式減速機組
Planetary Gearheads Production Line

馬達與減速機組
Induction Motor and
Speed Reducer Production Line

齒輪馬達組
Precision Gear Motor Production Line

Applications 產品應用

Applications of Planetary Gearhead

Machine Tools
Metal Cutting Machines, Machining Centers, CNC Drilling Machines, Lathes and Turning Machines, Milling and Boring Machines, Grinding Machines, Drilling Machines, Planning Machines, Metal Forming Machine Tools, Presses, Tube and Wire Processing Machines.

Industry Machinery
Packaging Machinery, Food and Beverage Processing Machinery, Bakery Equipment, Agricultural Machinery, Textile Machinery, Shoemaking Machinery, Wood Working Machinery, Printing Machinery, Plastic processing Machinery, Laser Cutting and Welding Machines.

Automation Equipment
Industrial Robots, Semiconductor Devices, Automatic Storage System, Surface Treatment Equipments.

Aerospace Industry
Medical and Rehabilitation Equipment
Electric Scooter
Green Energy-Related Industries
Testing Devices
Automation and Precise Positioning Equipment with Servo Motors

減速機之應用：

工具機業
金屬切削工具機、綜合加工機、鑽孔中心機、車床、銑床、磨床、鑽床、搪床、鉋床、金屬成型工具機、沖床、管材與線材加工設備、鍛造機械。

產業機械
包裝機、食品飲料機械、烘焙設備、農業機械、紡織機械、製鞋機械、木工機械、印刷機械、塑膠機械、雷射切割機、雷射焊接機。

自動化設備
產業機器人、半導體設備、自動倉儲設備、表面處理設備

航太工業
醫療復健設備
電動代步車
綠能相關產業
檢驗儀器
搭配伺服馬達之自動化機械及精密定位設備

SESAME

www.sesamemotor.com

PLANETARY GEARHEAD SERIES LINEUP

行星式減速機 產品系列圖

Program Features & Benefits

- Multiple design configurations and performance levels
- Adapters for all servo motors
- Drop-ins for most industry standards
- Hardened and ground gearing
- One-piece planet carrier/output shaft on most models
- Planets with full needle bearing support
- IP65 protection on most models

全系列產品特點

- 多樣化機種與性能搭配選擇
- 連接板適用各廠牌伺服馬達
- 應用設備範圍廣泛，可直接安裝使用
- 齒輪經獨特熱處理與研磨加工至最佳精度與耐磨耗度
- 一體成形行星固定架及出力軸設計
- 滿針排列行星齒輪針狀軸承
- IP65防護等級

Premium Type 極精密斜齒型

- Backlash as low as 1 arc-minute, ultimate performance
  極精密背隙可達1弧分，高階應用性能
- 3 designs to choose from, up to 7 sizes available
  3款機種X7款框號，適用各式機械設備
- Capacity from 10-2000 Nm
  額定輸出力矩10-2000 Nm

Precision Advanced Type 精密斜齒型

- 3 levesl of backlash, for demanding applications
  3等級精密背隙，應用範圍最廣泛
- 3 designs configurations, 7 frame sizes 42-220 mm
  3款機種X7款框號選用搭配，尺寸42-220 mm
- Square or round mounting, ratio from 3-100:1
  方形或圓形安裝介面，減速比3-100:1

Precision Type 精密型

- 3 levesl of backlash, 4 design configurations
  3等級精密背隙，4款平行軸機種
- 7 frame sizes 42-220 mm
  7款框號選用搭配，尺寸42-220 mm
- Square or round mounting, ratio from 3-100：1
  方形或圓形安裝介面，減速比3-100:1
- Stainless steel series available
  提供不鏽鋼材質機種搭配選用

Standard Type 標準型

- 5 frame sizes 42-115 mm, general purpose applications
  提供5種框號選用，最大尺寸115 mm
- Good backlash values, ratios up to 1000:1
  優異背隙精度，最高減速比達1000:1
- Reliable operating performance, cost effective integration
  性能穩定可靠，最適動力傳動性價比

Primary Type 泛用型

- 5 frame sizes 42-115 mm, general purpose applications
  提供5種框號選用，最大尺寸115 mm
- Good backlash values, ratios up to 1000:1
  優異背隙精度，最高減速比達1000:1
- Reliable operating performance, cost effective integration
  性能穩定可靠，最適動力傳動性價比

Output Shaft 出力軸型

In-line Series 平行出力軸系列

- Multiple models and performance levels including stainless steel material ready for most industry applications
  多樣化及不鏽鋼機型與性能搭配選擇，可直接安裝使用
- 3 levels of backlash, frame sizes 42-220 mm
  3等級精密背隙，框號尺寸42-220 mm
- Square or round mounting, ratios up to 1000:1
  方形或圓形安裝介面，最高減速比達1000:1

Right Angle Series 直角型系列

- 3 models to choose from, saving linear space
  3種機型對應各式應用需求，節省安裝空間
- 3 backlash levels, 7 sizes from 42-220 mm
  3等級精密背隙X7款框號選用搭配，最大尺寸220 mm
- Premium and precision designs, ratios from 3-200:1
  高階精密齒輪設計，最高減速比200:1

Output Flange 圓形法蘭面

Output Flange 圓形法蘭面中空軸系列

- Right angle and inline models, ISO mounting dimensions
  平行中空軸與直角機型，連接板適用各廠牌伺服馬達
- 3 levels of backlash, 7 frame sizes available
  3款機種X7款框號選用搭配
- High moment and axial load capacity
  高容許彎曲力矩及軸向負載能力

In-line Series 平行出力軸

PHL Series
High Precision

PGLH Series PGCH Series PGEH Series

PGL Series PGE Series PGC Series

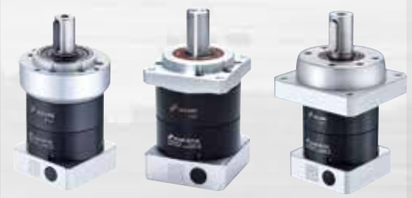

PAC Series PAE Series PGS Series

PBC Series
High Ratio (max. i=1000)

PGH Series
High Performance

PUL Series
High Radial Load

PGSH Series PUA Series

SGC Series
Stainless Steel

SGE Series
Stainless Steel

PAN Series (NEMA)
High Ratio
(max. i=1000)

PNS Series
High Ratio
(max. i=1000)

PBE Series
High Ratio (max. i=1000)

Right Angle 直角型

PUR Series

PGRH Series

PGR Series

PNSR Series

Output Flange 中空軸

PHF Series

PGF Series

PGW Series

Right Angle 直角型

PHFR Series

PGFR Series

Products due to human error, natural disasters or other factors lead to poor or damaged, will not be covered under warranty.
產品因人為原因或天災等因素導致不良或損壞，不在保固範圍內。

CODING SYSTEM 型號定義

P G H □ □ 9 0 T – 1 0 0 – P 2 – D K S S T – 14/50/30/3/70/4.5/27 – B J G 1

Customized Specifications
Blank=Standard
Custermized case #1
for BJ-GEAR=BJG1

客戶訂製規格
空白=標準規格
Custermized case #1
for BJ-GEAR=BJG1

Motor Flange Dim. 馬達尺寸

Input Design: E=Motor adaptation-one part
T=Motor adaptation- two part
F=No motor adaptation- universal flange

馬達-連接板型式: E=一體式連接板
T=分離式連接板
F=無連接板

Lubrication & Temperature: S=Standard, F=Food grade
L=Low temp, H=High temp

潤滑及使用溫度: S=標準規格 F=食品級潤滑油
L=低溫專用 H=高溫專用

Surface: S= Standard surface, P=Special surface
外觀: S=標準外觀表面 P=特殊表面處理

Output Design: K: Output shaft with Key, M: Smooth output shaft
F: Flange output shaft, H: Hollow output shaft

輸出軸形式: K: 附鍵實心軸 M: 光滑軸
F: 法蘭輸出軸 H: 中空軸

Clamping System Diameter
A=8, B=10, C=11, D=14, E=16, F=19, G=22,
H=24, K=28, M=32, P=35, R=38, S=50, T=55,
N=No clamping system, Z=Specified diameter,
W=Specified diameter with keyway

夾持內徑
A=8, B=10, C=11, D=14, E=16, F=19, G=22,
H=24, K=28, M=32, P=35, R=38, S=50,T=55,
N=無鎖緊環 Z=指定直徑
W=具鍵槽的特定直徑

Backlash: P0: Micro backlash, P1: Precision backlash, P2: Standard backlash
背隙: P0: 超精密背隙 P1: 精密背隙 P2: 標準背隙

Ratio: 3~10(1 Stage)/ 15~100(2 Stage)/ 125~1000(3 Stage)
減速比: 3~10(單段)/ 15~100(雙段)/ 125~1000(三段)

Type: T(2 Stage_T type)、A (A type) **型式:** T(雙段T型)、A (A型)

Size: 42、50、60、70、75、90、100、115、120、140、142、180、200、220、235、255
框號: 42、50、60、70、75、90、100、115、120、140、142、180、200、220、235、255

Series: PHL/PGH/PGRH/PGLH/PGSH/PGCH/PGEH(Output Shaft/Helical Gear)
PGL/PGR/PGE/PEE/PGC/PEC(Output Shaft/Spur Gear)
PUL/PUA/PUR(Output Shaft/Helical Gear/High Radial Force)
PHF/PGF/PHFR/PGFR(Output Flange/Helical Gear)
PAE/PAC/PGS/PAN/PNS(Output Shaft/Spur Gear)
PBE/PBC(Output Shaft/Spur Gear) ; SGC/SGE(Stainless/Output Shaft/Spur Gear)
PGW(Hollow Output Shaft/Spur Gear)

系列: PHL/PGH/PGRH/PGLH/PGSH/ PGCH/PGEH(實心軸型/斜齒)
PGL/PGR/PGE/PEE/PGC/PEC(實心軸型/直齒)
PUL/PUA/PUR(實心軸型/斜齒/高徑向負載)
PHF/PGF/PHFR/PGFR(圓形法蘭輸出軸/斜齒)
PAE/PAC/PGS/PAN/PNS(實心軸型/直齒)
PBE/PBC(實心軸型/直齒) ; SGC/SGE(不鏽鋼/實心軸型/直齒)
PGW(中空實心軸型/直齒)

Motor Flange Dimensions:
Motor shaft diameter A =5/6/6.35/8/9/11/9.5/9.525/10/11/12/12.7/14/15.875/16/19/20/22/24/28/32/35/38/42/48/50/55
Flage diameter B=30/50/70/90/110/130... ; Motor shaft length C=25/40/50/79... ; Flange height D=2/3/4/5...
PCD of bore E=43.38/66.67/70/90/115... ; Bore diameter F=3.4/4.5/5.1/6.6/9... ; Effective length of motor shaft L=21/27...

馬達尺寸:
馬達軸外徑 A =5/6/6.35/8/9/11/9.5/9.525/10/11/12/12.7/14/15.875/16/19/20/22/24/28/32/35/38/42/48/50/55
馬達凸緣外徑 B=30/50/70/90/110/130... ; 馬達軸長度 C=25/40/50/79... ; 馬達凸緣高度 D=2/3/4/5...
螺絲孔中心距 E=43.38/66.67/70/90/115... ; 螺絲孔直徑 F=3.4/4.5/5.1/6.6/9... ; 馬達軸有效長 L=21/27...

FILL IN DATA OF MOTOR 客戶填寫資料

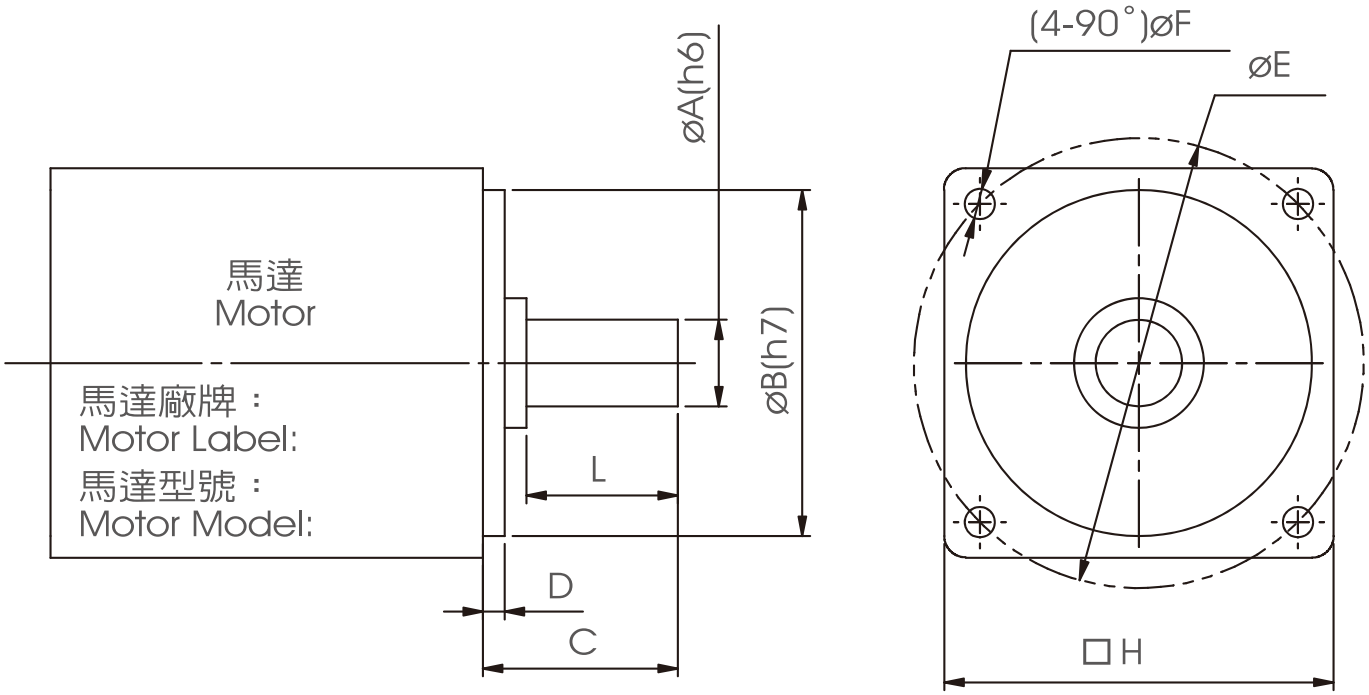

▶ 規格 SPECIFICATIONS

Motor Shaft Dia. 馬達軸外徑	Flange Dia. 馬達凸緣外徑	Motor Shaft Length 馬達軸長度	Flange Height 馬達凸緣高度	P.C.D of Bore 螺絲孔中心距	Bore Dia. 螺絲孔直徑	Motor Flange Square 馬達面尺寸	Actual Length of Motor Shaft 馬達軸有效長	Backlash 要求背隙
øA(h6)	øB(h7)	C	D	øE	øF	□H	L	P0/P1/P2

＊本公司生產之行星式減速機皆經過專屬配對加工，保證壽命超長並確保背隙精度不變，榮獲國內外知名機密機械或半導體大廠選用，值得信賴。

＊請客戶選購前事先詳細填妥上表回傳或上本公司官網「減速機選用」功能查詢，將可加快處理速度並避免選用錯誤。

＊Sesame Planetary Gearheads are produced under strictly exclusive Pairing Process to ensure accuracy and lifespan.

＊The above motor shaft and flange dimensions are required to prevent selection error when ordering gearhead. Online selection tools are available to configure and draw SESAME planetary gearhead, please visit www.sesamemotor.com.

1.NOTE 注意事項

1.1 Preparation before installation 安裝前準備

■ 使用前請熟讀“操作說明書”，若因人為原因、非產品本身原因或天災發生等因素而導致不良或損壞，在操作時違反本說明書所示內容而造成的損害，或未依照原本設計之使用方式及非經由本公司進行的改裝及維修所造成的故障，本公司將不承擔任何賠償責任，特此聲明，敬請見諒。
Please read this operation manual before using gearheads. Any problems caused by inappropriate operation contrary with the manual, or damage caused by natural disasters, or restructure the gearheads without our permission, Sesame will not hold any responsibility nor will the gearheads be covered by warranty.

■ 本公司的產品保固期間為購買產品後一年內。保固期限內，若產品因非人為因素而發生故障，客戶將產品寄回，本公司免費更換受損零件。
Warranty is one year after purchase of the gearheads. Within warranty period, if gearheads damage is not caused by operation error nor by natural disaster, then please send back the gearheads, we should replace the damage spare part at free of charge.

■ 減速機之安裝，拆卸，保養，須由專業技術人員進行之。
Installation, disassemble, maintenance on the gearheads, needed to be performed by trained technicians.

■ 依據安裝環境之通風狀況，長時間連續運轉下可能使得減速機溫度升高，運轉中與剛停機後請避免直接碰觸減速機。
According to the application and operation environment, the gearheads temperature might be raising after period of running. Please do not touch the gearheads directly during operation, or right off from operation.

■ 運轉中請勿接觸任何旋轉中之部件，減速機安裝完畢後請務必將側面的塞頭回塞，以避免細小物品掉入減速機中。
Do not touch any rotating components when the gearheads are running. Ensure that the plugs of the gearheads were inserted after installation. Avoid any small object fall into the gearheads.

■ 減速機為精密零組件，安裝過程中，請勿以軟鎚或者工具敲擊減速機本體，以避免影響運轉精度。
Handle the gearheads gently during installation, do not knock the gearheads by any tool, to avoid the influence of running accuracy.

■ 請勿對減速機進行拆解或改造，否則有可能受傷或造成設備受損。
Do not disassemble or modify gearheads to prevent injury or equipment damage .

■ 減速機為密封式設計，油品屬半固態高級合成油，不需換油。
Synthetic lubricant is sealed in gearheads, there is no need to change lubricant.

1.2 Installation environment limitation 安裝環境的限制

減速機必須依據下列條件安裝，不符合下列之安裝條件及使用環境將會損害到本產品，不在保固範圍內。
Gearheads must be installed under following terms to prevent damages which are not covered by warranty.

- 本產品之設計或製造，為使用裝配於其他之機械設備上。
  Gearheads are designed or manufactured to be used with other mechanical equipment assembly.
- 周圍使用溫度-10℃~+90℃。
  Operate temperature is between -10 ℃ to + 90 ℃.
- 高度 : 不可超過海平面1000公尺。
  Operate altitude may not be higher than 1000m above sea-level
- 避免連續性震動或撞擊。
  Avoid continuity vibration or impact.
- 避免將減速機使用於可燃氣體或腐蝕氣體之環境。
  Avoid gearheads used in flammable gas or corrosion gas environment.
- 溼度 : 不可超過85%，以避免水氣凝結。
  Humidity: no more than 85%, in order to avoid condensation.
- 避免陽光直射，灰塵堆積。
  Avoid direct sunlight, dust accumulation.
- 避免水或油的噴濺。
  Avoid water or oil splashed.
- 使用於良好通風之場所。
  Used in good ventilated place.

2.Gearhead Introduction 減速機介紹

減速機分為入力端與出力端，入力端用於安裝伺服馬達，出力端用於安裝在所需傳動的設備上。

As shown below, the input side is for installing the servo motor and the output is mounted to application equipment.

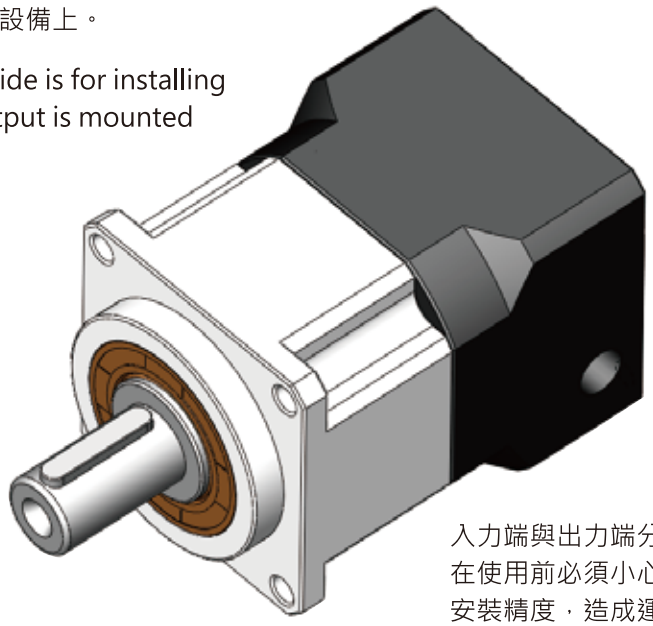

入力端與出力端分別與伺服馬達以及應用端連結。在使用前必須小心保護，避免刮傷或者生鏽，影響安裝精度，造成運轉不順暢。

To ensure the product performance, both the input and output ends must be protected carefully to avoid any damage and cause improper operation.

PLANETARY GEARHEAD WITH MOTOR MOUNTING INSTRUCTIONS 減速機馬達安裝說明書

For Parallel Type

1

先確認馬達減速機規格是否正確，並將馬達與減速機之安裝面擦拭乾淨。

Check the motor and gearbox size. Clean the mounting surface.

2

將連接板上扣式塞頭取下，轉動馬達鎖緊環，直到鎖緊環螺絲對準塞頭孔。

Take off the plug from the bracket. Revolve the set collar until the bolt is aligned with the hole.

3

取下馬達上原先的鍵，如有必要，請安裝平衡鍵。

Remove the key from the motor shaft. Mounting the balance key if necessary.

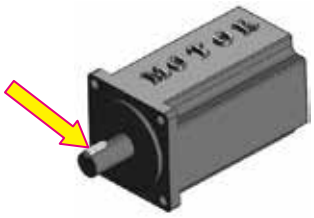

4

確認馬達軸心尺寸，軸心太小選用適當襯套。
Make sure the motor shaft size. Choose the right bushing if necessary.

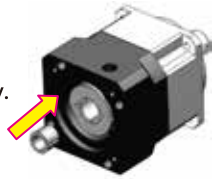

當馬達為平軸狀，對準襯套夾縫在平軸中心線，使鎖緊環螺絲與平軸面呈垂直。
As installing on flatted shaft, be sure to align the collet gap over the flat and the set collar bolt perpendicular to the flat.

5

馬達與減速機務必保持垂直組裝，參照鎖緊扭力表建議之扭力值的5%以扭力扳手將馬達鎖緊環螺絲輕輕鎖上。

Install gearbox and motor vertically. Tighten the set collar bolt with torque wrench to 5% of specified torque.

6

以鎖緊扭力表建議之扭力值，依照1至4順序，用扭力扳手將螺絲鎖緊。

Tighten the mounting bolts in 1~4 order with torque wrench to specified torque.

7

以鎖緊扭力表建議的扭力值，以扭力扳手將馬達鎖緊環螺絲鎖緊。

Tighten the set collar bolt with torque wrench to specified torque.

8

將扣式塞頭裝回。

Put the plug back.

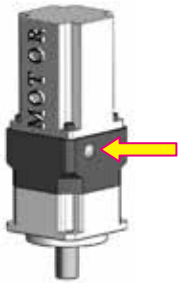

For Hollow Spindle

1

先確認馬達減速機規格是否正確，並將馬達與減速機之安裝面擦拭乾淨。

Check the motor and gearbox size. Clean the mounting surface.

2

將連接板上扣式塞頭取下，轉動馬達鎖緊環，直到鎖緊環螺絲對準塞頭孔。

Take off the plug from the adapter plate. Revolve the set collar until the bolt is aligned with the hole.

3

取下馬達上原先的鍵，如有必要，請安裝平衡鍵。

Remove the key from the motor shaft. Mounting the balance key if necessary.

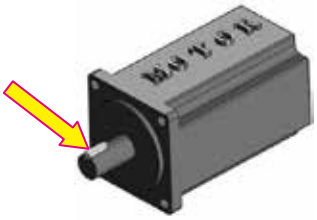

4

確認馬達軸心尺寸，軸心太小選用適當襯套。
Make sure the motor shaft size.
Choose the right bushing if necessary.

當馬達為平軸狀，對準襯套夾縫在平軸中心線，使鎖緊環螺絲與平軸面呈垂直。
As installing on flatted shaft, be sure to align the collet gap over the flat and the set collar bolt perpendicular to the flat.

5

馬達與減速機務必保持垂直組裝，參照鎖緊扭力表建議之扭力值的5%以扭力扳手將馬達鎖緊環螺絲輕輕鎖上。

Install gearbox and motor vertically. Tighten the set collar bolt with torque wrench to 5% of specified torque.

6

以鎖緊扭力表建議之扭力值，依照1至4順序，用扭力扳手將螺絲鎖緊。

Tighten the mounting bolts in 1~4 order with torque wrench to specified torque.

7

以鎖緊扭力表建議的扭力值，以扭力扳手將馬達鎖緊環螺絲鎖緊。

Tighten the set collar bolt with torque wrench to specified torque.

8

將扣式塞頭裝回。

Put the plug back.

Tightening Torque Table 鎖緊扭力表

Tightening Torque Recommended for Motor Mounting Bolt / 與馬達組合鎖緊螺絲扭力建議表

螺絲尺寸 Bolt Size	六角頭尺寸 Width Across Flats	強度12.9螺絲之鎖緊扭力 Strength 12.9 Tightening Torque	
	mm	N-m	In-lbs
M3*0.5P	2.5	2.1	19
M4*0.7P	3	4.9	44
M5*0.8P	4	9.8	87
M6*1P	5	17	151
M8*1.25P	6	41	364
M10*1.5P	8	80	709
M12*1.75P	10	139	1232
M14*2P	12	223	1976
M16*2P	14	343	3038

註1: 螺絲鎖緊扭力必須大於上述值。若有必要時，可以將鎖緊扭力多增加上述建議值的20%，以避免打滑。
Note 1: Holding torques must be bigger than values shown aboves. Bolts can be tightened up to 20% higher for increased holding.

SELECTION OF THE OPTIMUM GEARHEAD

Selection of the Optimum Gearhead

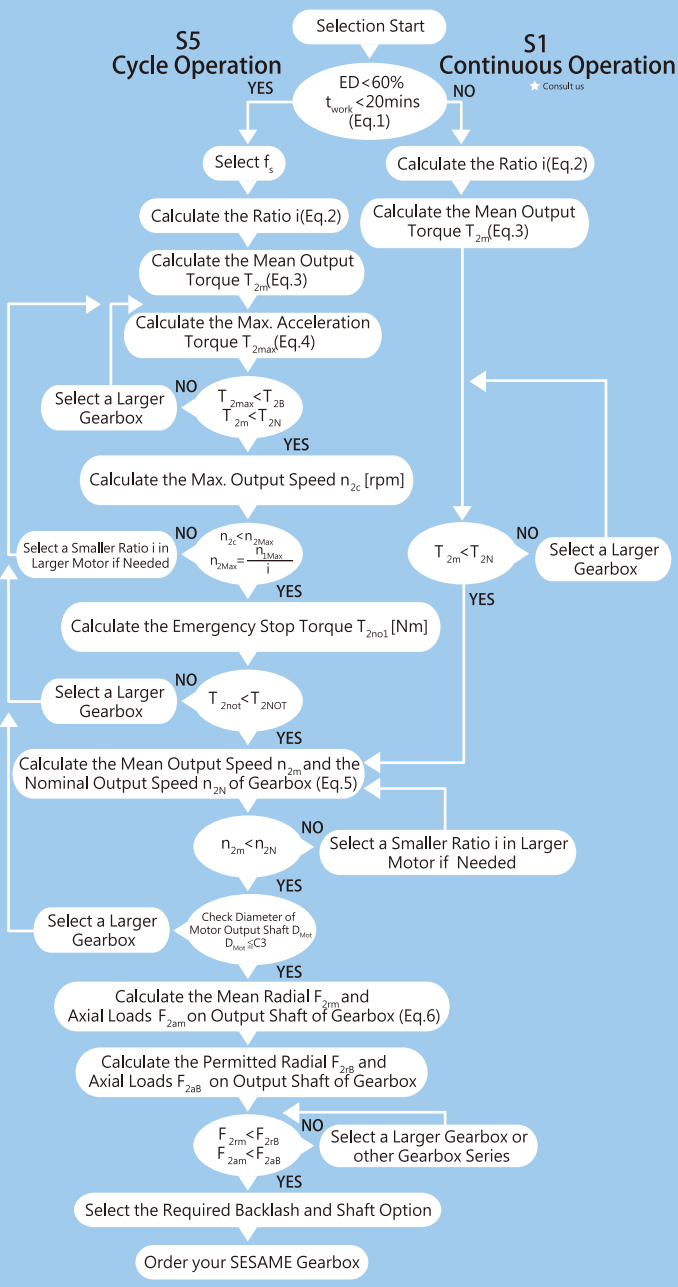

Recommended (for S5 Cycle Operation)

The general design is given for

$\frac{J_L}{i^2} \leqq 4 \times J_m$

The optimal design is given for

$\frac{J_L}{i^2} \leqq J_m$

J_L Load Inertia
J_m Motor Inertia

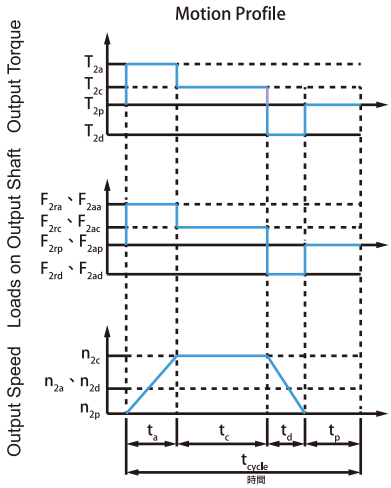

1. $ED = \frac{t_{work}}{t_{cycle}} \times 100\%,\ t_{work} = t_a + t_c + t_d$

Index：a. Acceleration, c. Constant, d. Deceleration, p. Pause (Eq.1)

2. $i \cong \frac{n_m}{n_{work}}$

n_m Output Speed of the Motor
n_{work} Working Speed (Eq.2)

3. $T_{2m} = \sqrt[3]{\frac{n_{2a} \times t_a \times T_{2a}^3 \times n_{2c} \times t_c \times T_{2c}^3 + n_{2d} \times t_d \times T_{2d}^3}{n_{2a} \times t_a + n_{2c} \times t_c + n_{2d} \times t_d}}$ (Eq.3)

4. $T_{2max} = T_{mB} \times i \times f_s \times \eta$

Where f_s is

f_s	No. of Cycles / hr
1.0	0 ~ 1,000
1.1	1,000 ~ 1,500
1.3	1,500 ~ 2,000
1.6	2,000 ~ 3,000
1.8	3,000 ~ 5,000

T_{mB} Max. Output Torque of the Motor
η Efficiency of the Gearbox (Eq.4)

5. $n_{2a} = n_{2d} = \frac{1}{2} \times n_{2c}$

$n_{2m} = \frac{n_{2a} \times t_a + n_{2c} \times t_c + n_{2d} \times t_d}{t_a + t_c + t_d}$

$n_{2N} = \frac{n_{1N}}{i}$ (Eq.5)

6. $F_{2rm} = \sqrt[3]{\frac{n_{2a} \times t_a \times F_{2ra}^3 \times n_{2c} \times t_c \times F_{2rc}^3 + n_{2d} \times t_d \times F_{2rd}^3}{n_{2a} \times t_a + n_{2c} \times t_c + n_{2d} \times t_d}}$

$F_{2am} = \sqrt[3]{\frac{n_{2a} \times t_a \times F_{2aa}^3 \times n_{2c} \times t_c \times F_{2ac}^3 + n_{2d} \times t_d \times F_{2ad}^3}{n_{2a} \times t_a + n_{2c} \times t_c + n_{2d} \times t_d}}$ (Eq.6)

減速機的選用

如何選用減速機

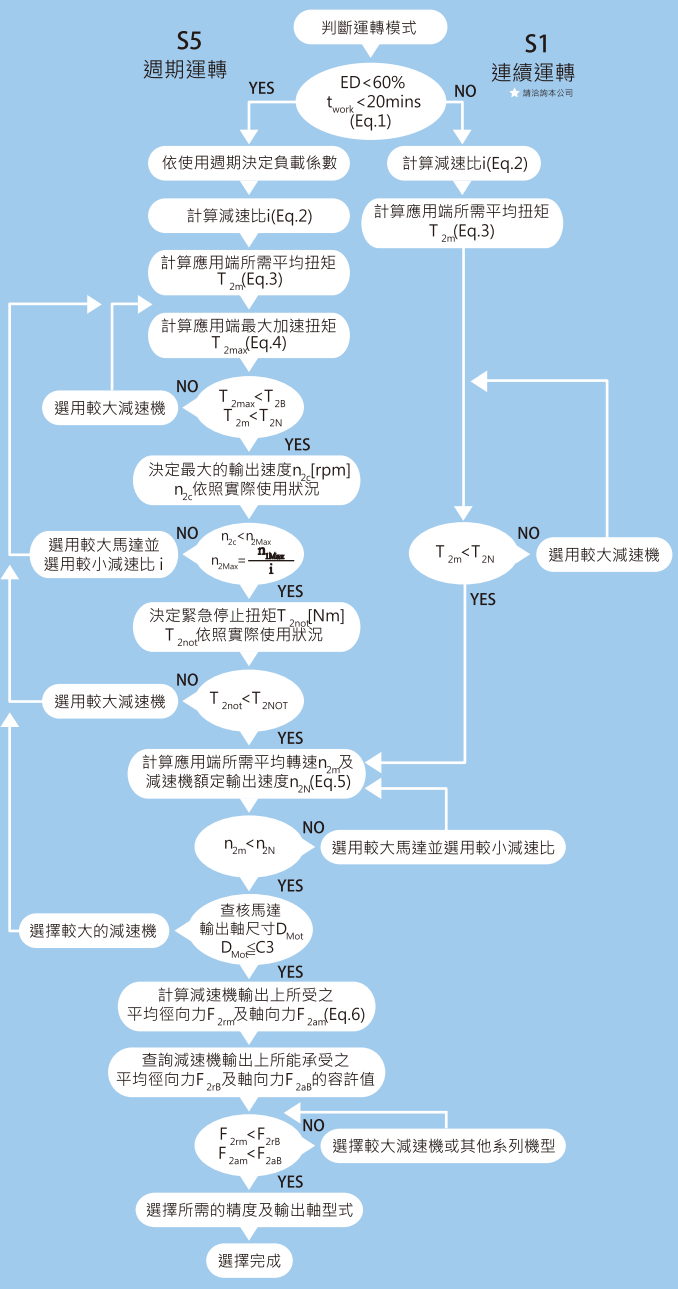

S5週期運轉之建議事項

一般的應用慣量須符合以下公式

$$\frac{J_L}{i^2} \leq 4 \times J_m$$

最適當的應用慣量須符合以下公式

$$\frac{J_L}{i^2} \leq J_m$$

J_L 負載慣量

J_m 馬達慣量

應用端運動模式

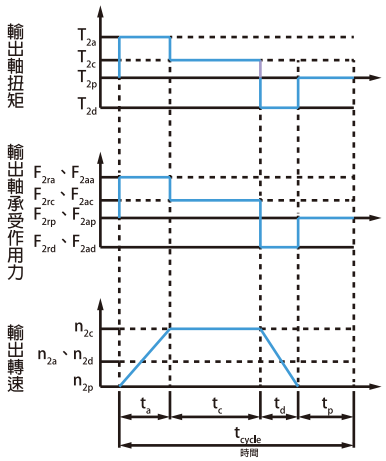

1. $ED = \frac{t_{work}}{t_{cycle}} \times 100\%,\ t_{work} = t_a + t_c + t_d$

下標說明：a. 加速，c. 等速
d. 減速，p. 停止 (Eq.1)

2. $i \leq \frac{n_m}{n_{work}}$

n_m 馬達輸出速度
n_{work} 實際應用速度 (Eq.2)

3. $$T_{2m} = \sqrt[3]{\frac{n_{2a} \times t_a \times T_{2a}^3 \times n_{2c} \times t_c \times T_{2c}^3 + n_{2d} \times t_d \times T_{2d}^3}{n_{2a} \times t_a + n_{2c} \times t_c + n_{2d} \times t_d}}$$ (Eq.3)

4. $T_{2max} = T_{mB} \times i \times f_s \times \eta$

f_s 負載係數

f_s	週期次數/小時
1.0	0 ~ 1,000
1.1	1,000 ~ 1,500
1.3	1,500 ~ 2,000
1.6	2,000 ~ 3,000
1.8	3,000 ~ 5,000

T_{mB} 馬達最大輸出扭矩
η 減速機運轉效率 (Eq.4)

5. $n_{2a} = n_{2d} = \frac{1}{2} \times n_{2c}$

$$n_{2m} = \frac{n_{2a} \times t_a + n_{2c} \times t_c + n_{2d} \times t_d}{t_a + t_c + t_d}$$

$$n_{2N} = \frac{n_{1N}}{i}$$ (Eq.5)

6. $$F_{2rm} = \sqrt[3]{\frac{n_{2a} \times t_a \times F_{2ra}^3 \times n_{2c} \times t_c \times F_{2rc}^3 + n_{2d} \times t_d \times F_{2rd}^3}{n_{2a} \times t_a + n_{2c} \times t_c + n_{2d} \times t_d}}$$

$$F_{2am} = \sqrt[3]{\frac{n_{2a} \times t_a \times F_{2aa}^3 \times n_{2c} \times t_c \times F_{2ac}^3 + n_{2d} \times t_d \times F_{2ad}^3}{n_{2a} \times t_a + n_{2c} \times t_c + n_{2d} \times t_d}}$$ (Eq.6)

PHL SERIES

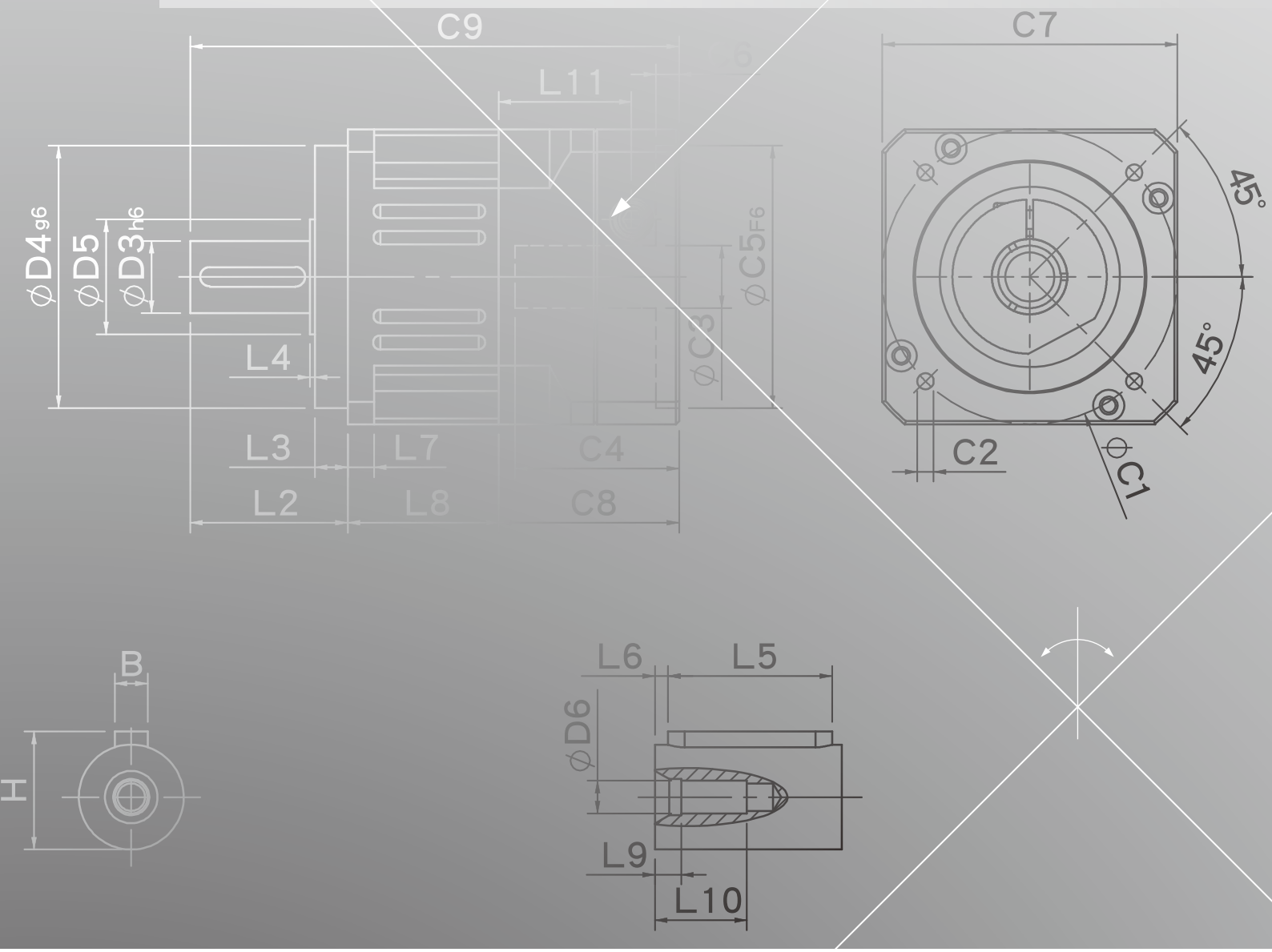
C9
L11
C7
45°
45°
ØD4g6
ØD5
ØD3h6
ØC5F6
ØC3
L4
L3
L7
C4
L2
L8
C8
C2
ØC1
B
H
L6
L5
ØD6
L9
L10

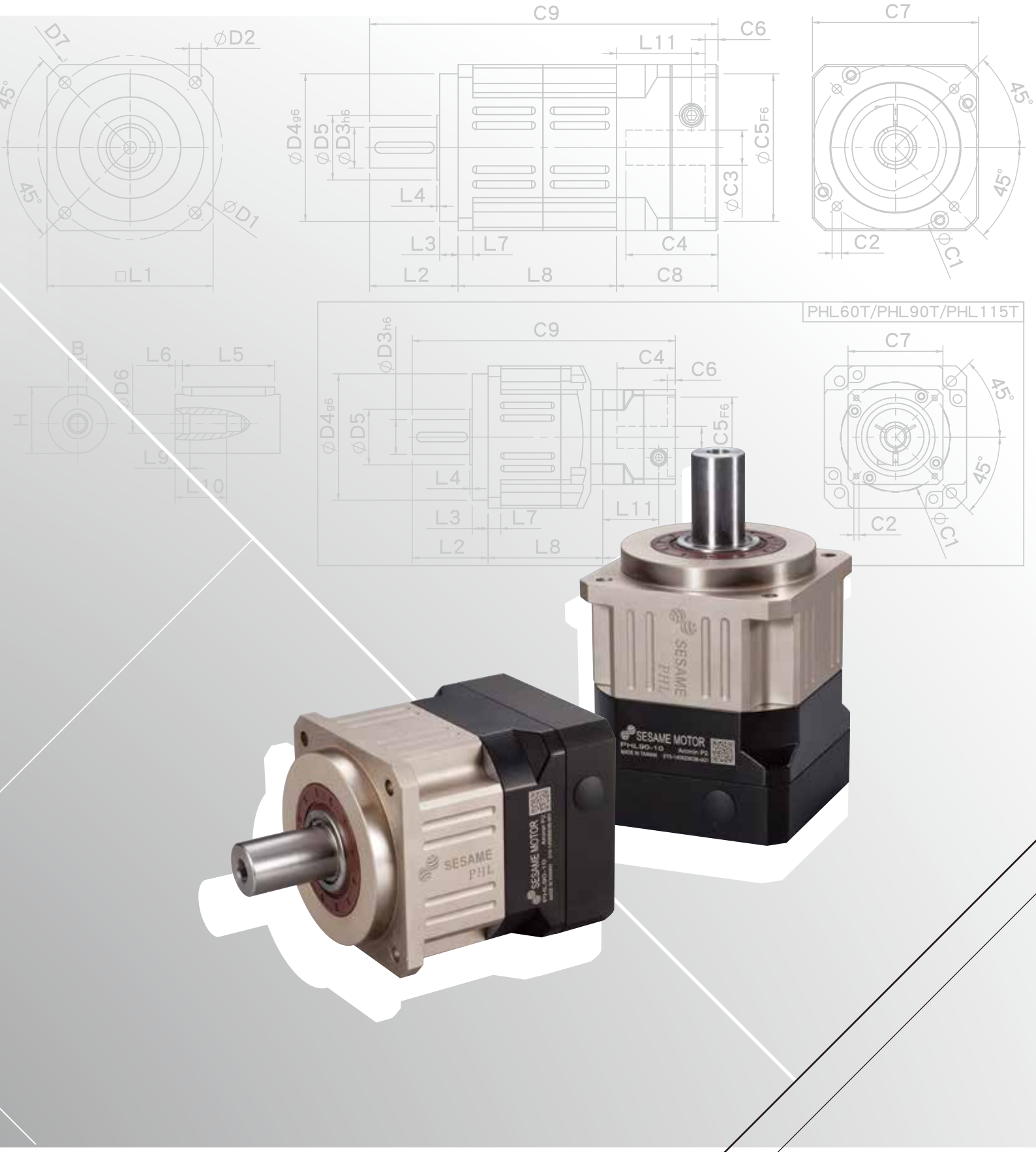
D7
ϕD2
45°
45°
ϕD1
□L1
C9
C6
L11
ϕD4g6
ϕD5
ϕD3h6
ϕC5F6
ϕC3
L4
L3
L7
C4
L2
L8
C8
C7
45°
45°
C2
ϕC1
PHL60T/PHL90T/PHL115T
B
L6
L5
ϕD6
H
L9
L10
ϕD3h6
C9
C4
C6
ϕD4g6
ϕD5
C5F6
L4
L11
L3
L7
L2
L8
C7
45°
45°
C2
ϕC1
SESAME
PHL
SESAME MOTOR
PHL90-10
SESAME
PHL
SESAME MOTOR

PHL Single Stage Dimensions PHL單段外型尺寸圖

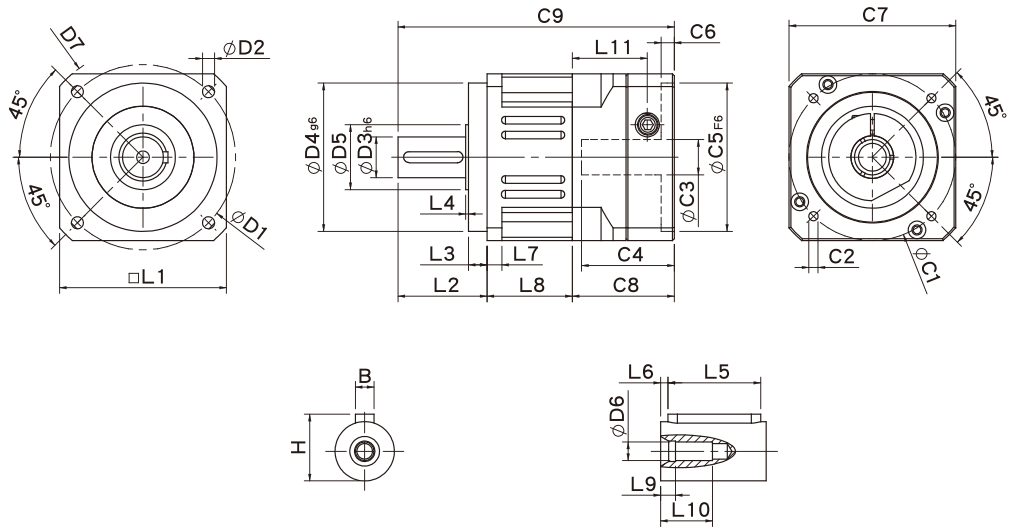

Specifications 規格

Unit:mm

尺寸 Dimensions	PHL42	PHL60	PHL90
D1	50	70	100
D2	3.4	5.5	6.5
D3 h6	13	16	22
D4 g6	35	50	80
D5	15	25	35
D6	M4x0.7P	M5x0.8P	M8x1.25P
D7	56	80	118
L1	42.6	60	90
L2	26	37	48
L3	5.5	7	10
L4	1	1.5	1.5
L5	15	25	32
L6	2	2	3
L7	4	6	8
L8	28.3	37	46
L9	4	4	4.5
L10	14	16.5	20.5
L11	29	35.5	40.5
C1 [2]	46	70	90
C2 [2]	M4x0.7P	M5x0.8P	M6x1.0P
C3 [2]	≦8/≦11	≦14	≦19/≦24
C4 [2]	27	37	47
C5 [2] F6	30	50	70
C6 [2]	4	4	6
C7 [2]	42.6	60	90
C8 [2]	38.5	46	55
C9 [2]	92.8	120	149
B	5	5	6
H	15	18	24.5

★ C1~C9是公製標準馬達連接板尺寸,請依所選用的馬達決定.

★ 本公司有權針對以上數據規格逕行設計變更不先行告知.

★ C1~C9 are motor specific dimensions(metric std shown), Size may vary according to motor flange.

★ Specification subject to change without notice.

PHL Double Stage Dimensions PHL雙段外型尺寸圖

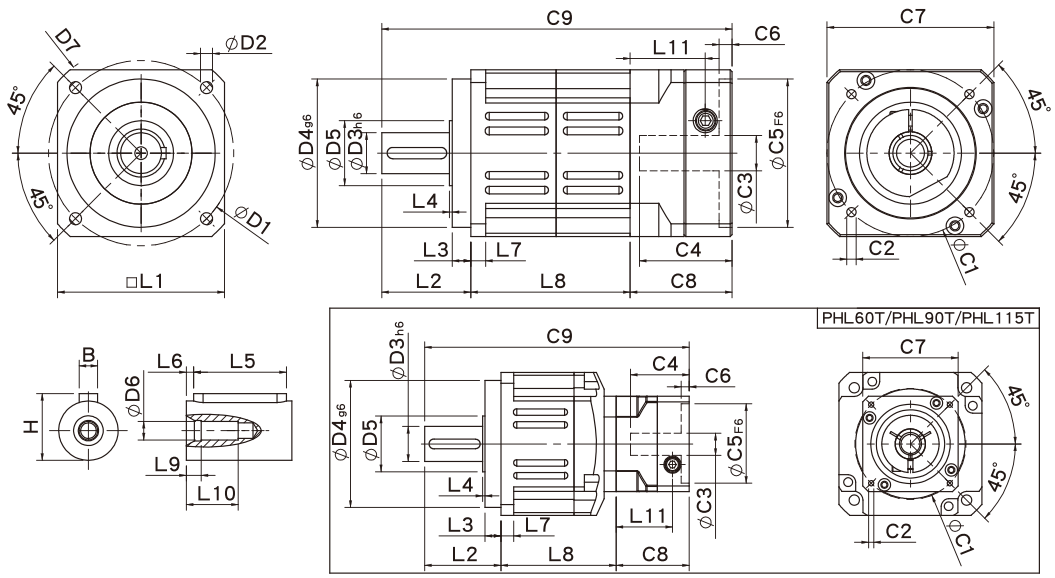

Specifications 規格

Unit:mm

尺寸 Dimensions	PHL42	PHL60	PHL60T	PHL90	PHL90T
D1	50	70		100	
D2	3.4	5.5		6.5	
D3 h6	13	16		22	
D4 g6	35	50		80	
D5	15	25		35	
D6	M4x0.7P	M5x0.8P		M8x1.25P	
D7	56	80		118	
L1	42.6	60		90	
L2	26	37		48	
L3	5.5	7		10	
L4	1.5	1.5		1.5	
L5	15	25		32	
L6	2	2		3	
L7	4	6		8	
L8	55.3	70	65.5	86	78.5
L9	4	4		4.5	
L10	14	16.5		20.5	
L11	29	35.5	29	40.5	35.5
C1 [2]	46	70	46	90	70
C2 [2]	M4x0.7P	M5x0.8P	M5x0.8P	M6x1.0P	M5x0.8P
C3 [2]	≦8/≦11	≦14	≦8/≦11	≦19/≦24	≦14
C4 [2]	27	37	27	47	37
C5 [2] F6	30	50	30	70	50
C6 [2]	4	4	4	6	4
C7 [2]	42.6	60	42.6	90	60
C8 [2]	38.5	46	38.5	55	46
C9 [2]	119.8	153	141	189	172.5
B	5	5		6	
H	15	18		24.5	

★ C1~C9是公製標準馬達連接板尺寸,請依所選用的馬達決定.

★ 本公司有權針對以上數據規格逕行設計變更不先行告知.

★ C1~C9 are motor specific dimensions(metric std shown), Size may vary according to motor flange.

★ Specification subject to change without notice.

PHL Specifications Table PHL性能規格共表

規格 Specifications		節數 Stage	減速比 Ratio	PHL-42	PHL-60	PHL-90
額定輸出力矩 T_{2N} Nominal Output Torque	N • m	1	3	19	53	145
			4	20	55	150
			5	17	54	140
			6	15	46	135
			7	14	44	125
			8	12	41	110
			9	11	37	95.0
			10	11	37	95.0
		節數 Stage	減速比 Ratio	PHL-42	PHL-60(T)	PHL-90(T)
		2	15	19	53	145
			20	20	55	150
			25	17	54	140
			30	17	54	140
			35	17	54	140
			40	17	54	140
			45	17	54	140
			50	17	54	140
			60	15	46	135
			70	14	44	125
			80	12	41	110
			90	11	37	95
			100	11	37	95
急停力矩 T_{2NOT} Emergency Stop Torque	N • m		3.0 倍額定輸出力矩 (3.0 times of Nominal Output Torque) (* 最大輸出力矩 Max. Output Torque T_{2B} =60% of Emergency Stop Torque)			
額定輸入轉速 n_{1N} Nominal Input Speed	rpm	1,2	3-100	5000	5000	4000
最大輸入轉速 n_{1max} Max. Input Speed	rpm	1,2	3-100	10000	10000	8000
超精密背隙 Micro Backlash P0	arcmin	1	3-10	≦1	≦1	≦1
		2	15-100	≦3	≦3	≦3
精密背隙 Precision Backlash P1	arcmin	1	3-10	≦3	≦3	≦3
		2	15-100	≦5	≦5	≦5
標準背隙 Standard Backlash P2	arcmin	1	3-10	≦5	≦5	≦5
		2	15-100	≦7	≦7	≦7
扭轉剛性Torsional Rigidity	N • m /arcmin	1,2	3-100	2.5	6	12
容許徑向力 F_{2rB} [1] Max. Radial Load	N	1,2	3-100	760	1570	2780
容許軸向力 F_{2aB} [1] Max. Axial Load	N	1,2	3-100	410	750	1870
使用溫度 Operating Temp.	°C		3-100	-10 °C ~+90 °C		
使用壽命Service Life	hr		3-100	20,000 (10,000/ 連續運轉 Continuous operation)		
效率 Efficiency	%	1	3-10	≧97%		
		2	15-100	≧94%		
重量 Weight	kg	1	3-10	0.6	1.3	3.5
		2	15-100	0.9	2.0/1.6	5.6/3.9
安裝方向 Mounting Position	-	1,2	3-100	任意方向Any direction		
噪音值 Noise Level [2]	dBA/1m	1,2	3-100	56	58	60
防護等級 Protection Class	-	1,2	3-100	IP65		
潤滑 Lubrication	-	1,2	3-100	全合成潤滑油 Synthetic Lubricant		

減速機轉動慣量 Inertia(J1)

節數Stage	減速比Ratio	單位unit	PHL-42	PHL-60	PHL-90
1	3	Kg • cm^2	0.03	0.23	0.97
	4		0.02	0.18	0.67
	5		0.02	0.17	0.65
	6/7/8		0.02	0.14	0.60
	9/10		0.02	0.14	0.58
節數Stage	減速比Ratio		PHL-42	PHL-60(T)	PHL-90(T)
2	15/20/25		0.02	0.17(0.02)	0.65(0.17)
	30/35/40		0.02	0.14(0.02)	0.60(0.14)
	45/50/60/70/80/90/100		0.02	0.14(0.02)	0.58(0.14)

* 1. 輸出轉速 100rpm 時，作用於輸出軸中心位置。Applied to the output shaft center @100rpm.
* 2. 3000rpm 空載量測。Measured at 3000 rpm with no load. These values are measured by gearbox with ratio = 10 (1-stage) or ratio = 100 (2-stage) at nominal input speed or 3000 rpm (if nominal input speed is higher than 3000 rpm) with no load.

※本公司有權對以上數據規格逕行設計變更不先行告知。The above figures/specifications are subject to change without prior notice.

Products due to human error, natural disasters or other factors lead to poor or damaged, will not be covered under warranty.
產品因人為原因或天災等因素導致不良或損壞，不在保固範圍內。


SESAME MOTOR
SESAME MOTOR
SESAME MOTOR

PHFR SERIES

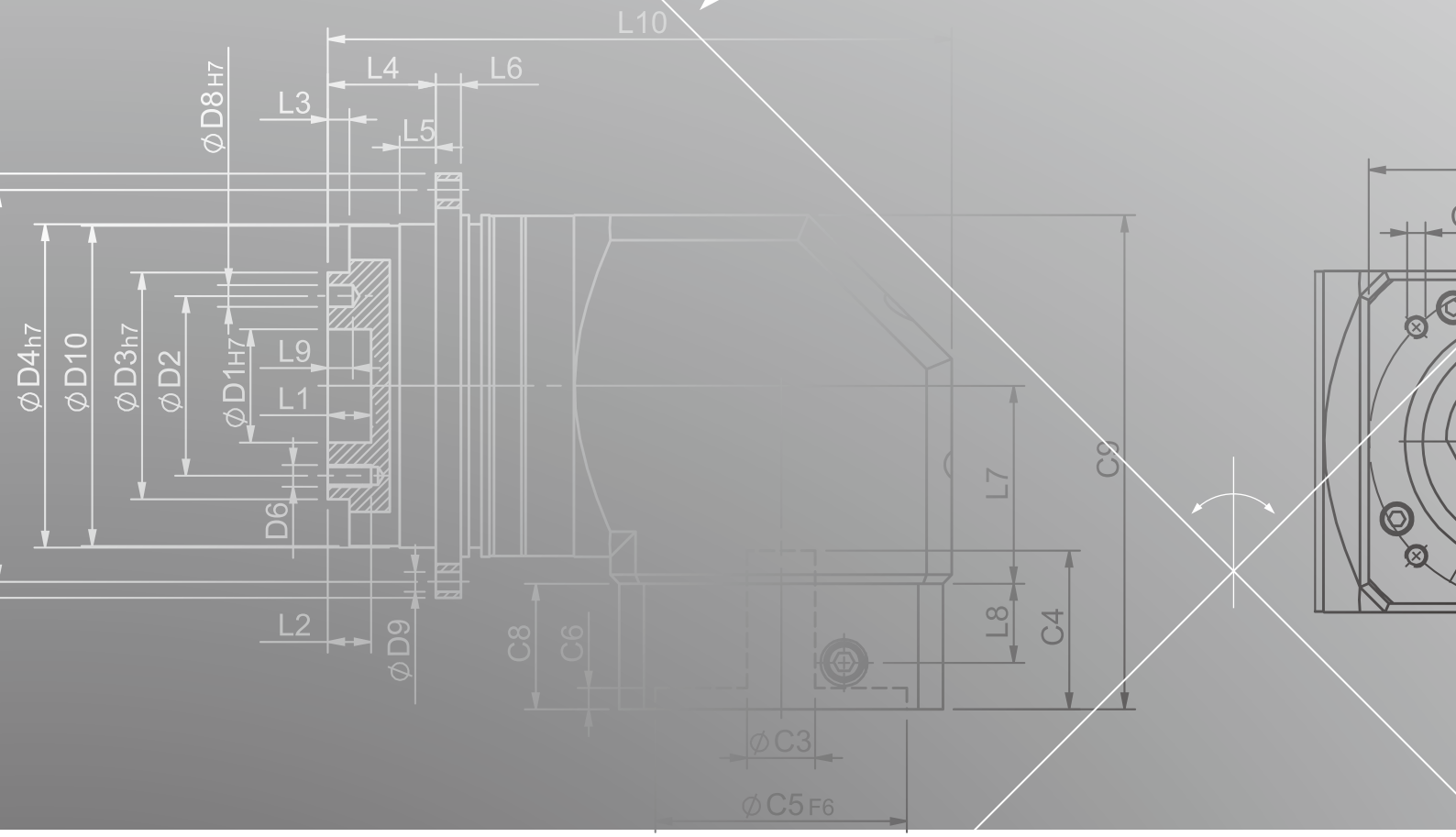
L10
L4
L6
L3
L5
ØD8H7
ØD4h7
ØD10
ØD3h7
ØD2
ØD1H7
L9
L1
D6
L2
ØD9
C8
C6
L7
L8
C4
C9
ØC3
ØC5F6

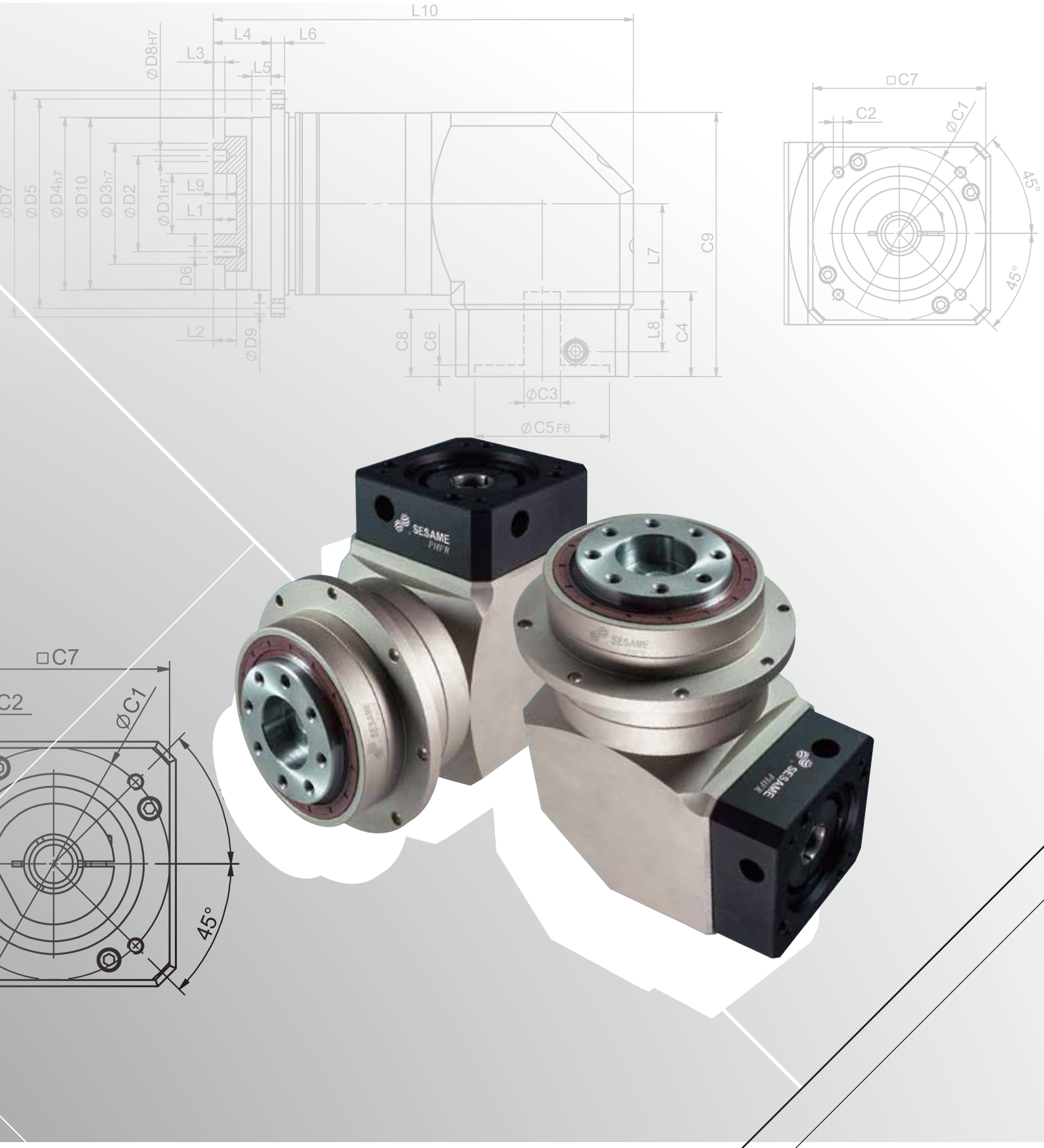
L10
L4
L6
L3
L5
ØD8H7
ØD7
ØD5
ØD4h7
ØD10
ØD3h7
ØD2
ØD1H7
L9
L1
D6
L2
ØD9
C8
C6
L7
L8
C9
C4
ØC3
ØC5F6
□C7
C2
ØC1
45°
45°
SESAME

PHFR Single Stage Dimensions PHFR單段外型尺寸圖

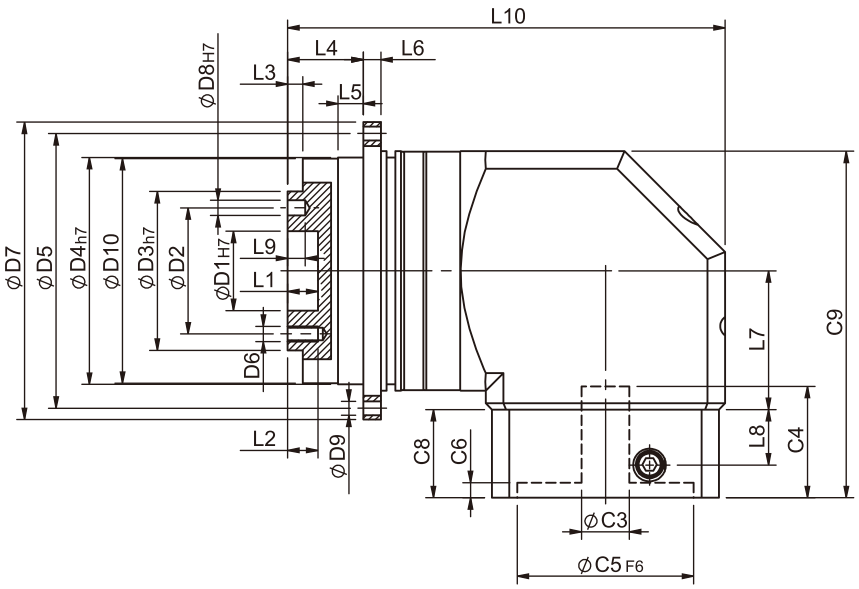

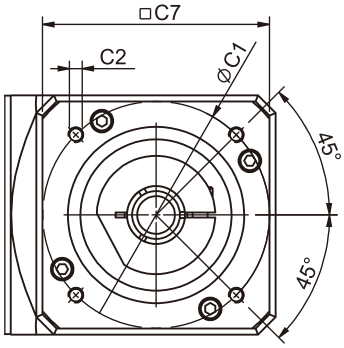

Specifications 規格

Unit:mm

尺寸 Dimensions	PHFR42	PHFR60	PHFR90	PHFR115	PHFR142	PHFR200	PHFR255
D1 H7	12	20	31.5	40	50	80	100
D2	20	31.5	50	63	80	125	140
D3 h7	28	40	63	80	100	160	180
D4 h7	47	64	90	110	140	200	255
D5	67	79	109	135	168	233	280
D6	M3x0.5P	M5x0.8P	M6x1.0P	M6x1.0P	M8x1.25P	M10x1.5P	M16x2.0P
D7	72	86	118	145	179	247	300
D8 H7	3	5	6	6	8	10	12
D9	3.4	4.5	5.5	5.5	6.6	9	13.5
D10	46.2	63.2	89.2	109.2	139.2	199.2	254.2
L1	4	8	12	12	12	16	20
L2	6	7.2	12	13.5	16	22.5	30.5
L3	3	3	6	6	6	8	12
L4	19.5	19.5	30	29	38	50	66
L5	7	7	10	10	14.6	15	20
L6	4	4	7	8	10	12	18
L7	32.2	44.8	55	69	71	92.5	92.5
L8	13.5	21.5	22	32	44.7	44	60
L9	4	6	7	7	7	10	10
L10	92.2	128.3	173.6	204.2	250.7	330.7	392.2
C1 [2]	46	70	90	90	145	200	215
C2 [2]	M4x0.7P	M5x08P	M6x1.0P	M6x1.0P	M8x1.25P	M12x1.75P	M12x1.75P
C3 [2]	≦8/≦11	≦14/≦19	≦19/≦24	≦24/≦32	≦35	≦50	≦55
C4 [2]	29	34	44	53.5	76.8	78.8	98.7
C5 [2] F6	30	50	70	70	110	114.3	180
C6 [2]	6	5	5	5.5	9	6	6
C7 [2]	42.6	60	90	115	140	180	220
C8 [2]	25	33	35	48	65	65	85
C9 [2]	78.5	112.8	137.5	176.5	225.5	246.5	266.5

★ C1~C9是公製標準馬達連接板尺寸,請依所選用的馬達決定.

★ 本公司有權針對以上數據規格逕行設計變更不先行告知.

★ C1~C9 are motor specific dimensions(metric std shown), Size may vary according to motor flange.

★ Specification subject to change without notice.

PHFR Double Stage Dimensions-1 PHFR雙段外型尺寸圖-1

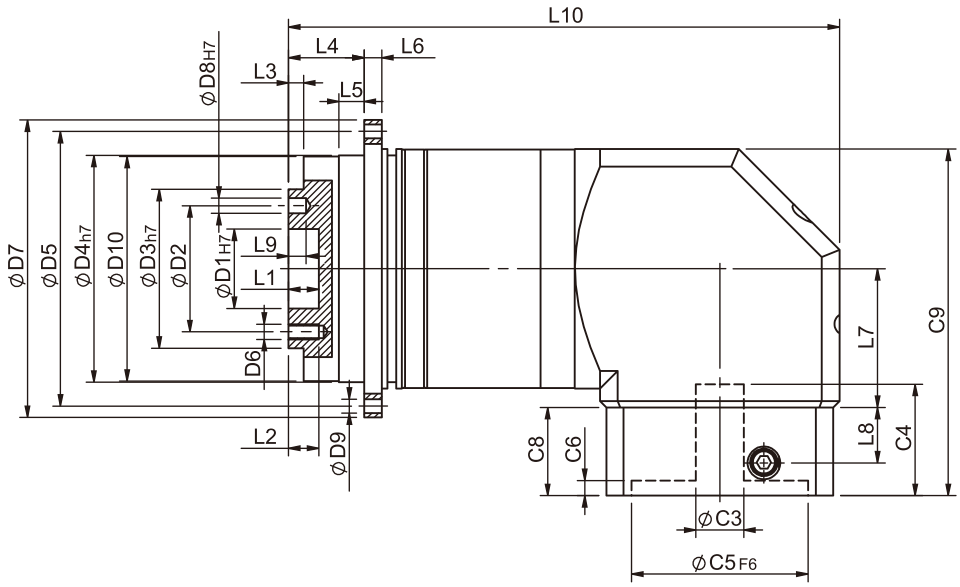

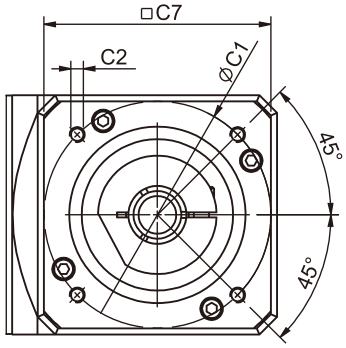

Specifications 規格

Unit:mm

尺寸 Dimensions	PHFR42	PHFR60	PHFR90
D1 H7	12	20	31.5
D2	20	31.5	50
D3 h7	28	40	63
D4 h7	47	64	90
D5	67	79	109
D6	M3x0.5P	M5x0.8P	M6x1.0P
D7	72	86	118
D8 H7	3	5	6
D9	3.4	4.5	5.5
D10	46.2	63.2	89.2
L1	4	8	12
L2	6	7.2	12
L3	3	3	6
L4	19.5	19.5	30
L5	7	7	10
L6	4	4	7
L7	32.2	44.8	55
L8	13.5	21.5	22
L9	4	6	7
L10	119.9	163.3	218.6
C1 [2]	46	70	90
C2 [2]	M4x0.7P	M5x08P	M6x1.0P
C3 [2]	≦8	≦14	≦19/≦24
C4 [2]	29	34	44
C5 [2] F6	30	50	70
C6 [2]	6	5	5
C7 [2]	42.6	60	90
C8 [2]	25	33	35
C9 [2]	78.5	112.8	137.5

★ C1~C9是公製標準馬達連接板尺寸,請依所選用的馬達決定.

★ 本公司有權針對以上數據規格逕行設計變更不先行告知.

★ C1~C9 are motor specific dimensions(metric std shown), Size may vary according to motor flange.

★ Specification subject to change without notice.

PHFR Double Stage Dimensions-2 PHFR雙段外型尺寸圖-2

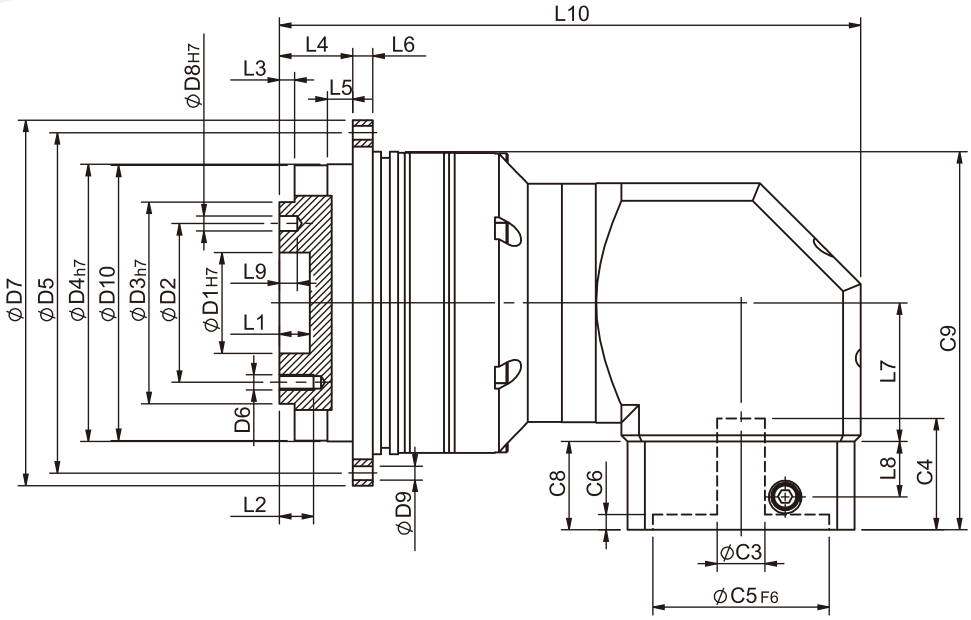

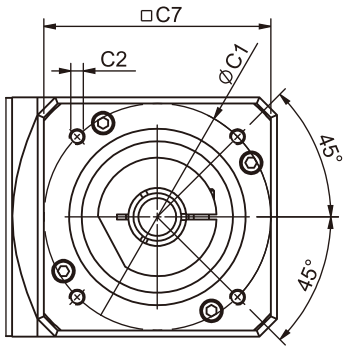

Specifications 規格

Unit:mm

尺寸 Dimensions	PHFR60T	PHFR90T	PHFR115T	PHFR142T	PHFR200T	PHFR255T
D1 H7	20	31.5	40	50	80	100
D2	31.5	50	63	80	125	140
D3 h7	40	63	80	100	160	180
D4 h7	64	90	110	140	200	255
D5	79	109	135	168	233	280
D6	M5x0.8P	M6x1.0P	M6x1.0P	M8x1.25P	M10x1.5P	M16x2.0P
D7	86	118	145	179	247	300
D8 H7	5	6	6	8	10	12
D9	4.5	5.5	5.5	6.6	9	13.5
D10	63.2	89.2	109.2	139.2	199.2	254.2
L1	8	12	12	12	16	20
L2	7.2	12	13.5	16	22.5	30.5
L3	3	6	6	6	8	12
L4	19.5	30	29	38	50	66
L5	7	10	10	14.6	15	20
L6	4	7	8	10	12	18
L7	32.2	44.8	55	69	71	92.5
L8	13.5	21.5	22	32	44.7	44
L9	6	7	7	7	10	10
L10	130.6	173.8	230.6	270.7	361.4	439.2
C1 [2]	46	70	90	90	145	200
C2 [2]	M4x0.7P	M5x0.8P	M6x1.0P	M6x1.0P	M8x1.25P	M12x1.75P
C3 [2]	≦8/≦11	≦14/≦19	≦19/≦24	≦24/≦32	≦35	≦50
C4 [2]	29	34	44	53.5	76.8	78.8
C5 [2] F6	30	50	70	70	110	114.3
C6 [2]	6	5	5	5.5	9	6
C7 [2]	42.6	60	90	115	140	92.5
C8 [2]	25	33	35	48	65	65
C9 [2]	84.4	125.3	150	176.5	259.5	284

★ C1~C9是公製標準馬達連接板尺寸,請依所選用的馬達決定.

★ 本公司有權針對以上數據規格逕行設計變更不先行告知.

★ C1~C9 are motor specific dimensions(metric std shown), Size may vary according to motor flange.

★ Specification subject to change without notice.

PHFR Flange Dimensions PHFR法蘭面尺寸圖

PHFR42

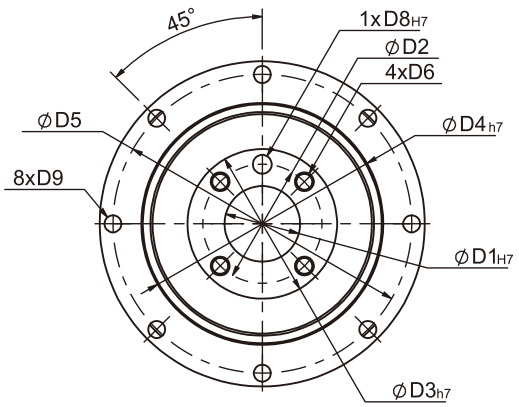

PHFR60
PHFR90

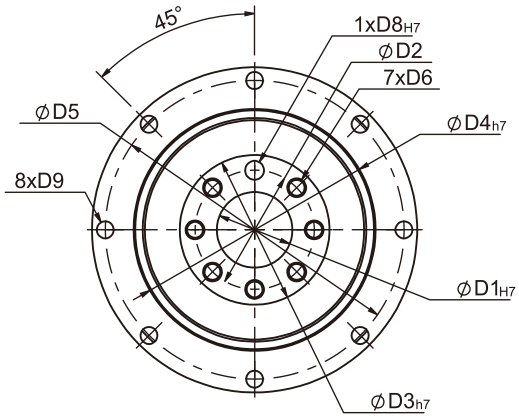

PHFR115

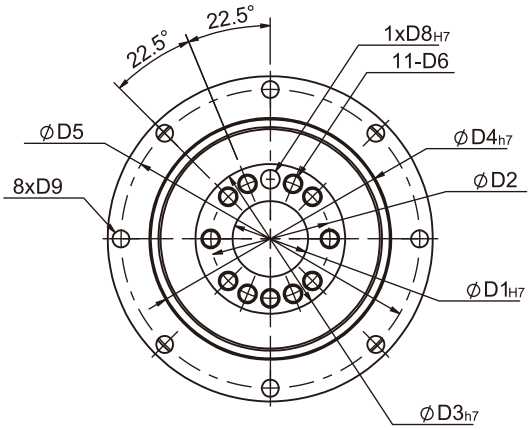

PHFR142
PHFR200

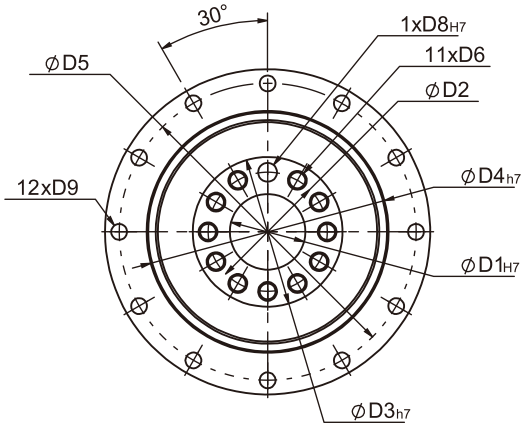

Specifications 規格

Unit:mm

尺寸 Dimensions	PHFR42	PHFR60	PHFR90	PHFR115	PHFR142	PHFR200
D1 H7	12	20	31.5	40	50	80
D2	20	31.5	50	63	80	125
D3 h7	28	40	63	80	100	160
D4 h7	47	64	90	110	140	200
D5	67	79	109	135	168	233
D6	M3x0.5P	M5x0.8P	M6x1.0P	M6x1.0P	M8x1.25P	M10x1.5P
D8 H7	3	5	6	6	8	10
D9	3.4	4.5	5.5	5.5	6.6	9

★ 本公司有權針對以上數據規格逕行設計變更不先行告知.　★ Specification subject to change without notice.

PHFR Specifications Table PHFR性能規格共表

規格 Specifications		節數 Stage	減速比 Ratio	PHFR-42	PHFR-60	PHFR-90	PHFR-115	PHFR-142	PHFR-200	PHFR-255
額定輸出力矩 T_{2N} Nominal Output Torque	N • m	1	3	-	40	105	180	340	580	950
			4	16	43	110	240	500	1100	1500
			5	17	50	130	290	600	1200	1800
			7	14	44	125	270	530	1100	1750
			10	17	50	130	260	540	900	1500
			14	14	44	125	270	530	1100	1750
			20	11	37	95	220	430	900	1450
		節數 Stage	減速比 Ratio	PHFR-42	PHFR-60 (T)	PHFR-90(T)	PHFR-115T	PHFR-142T	PHFR-200T	PHFR-255T
		2	15	-	40	105	180	600	1200	2000
			20	16	43	110	240	600	1200	2000
			25	17	50	130	290	600	1200	2000
			30	17	40	105	180	600	1200	2000
			35	17	50	130	290	600	1200	2000
			40	16	43	110	240	600	1200	2000
			50	17	50	130	290	600	1200	2000
			70	14	44	125	270	530	1100	1750
			100	11	37	95	220	430	900	1450
			140	14	44	125	270	530	1100	1750
			200	11	37	95	220	430	900	1450
急停力矩 T_{2NOT} Emergency Stop Torque	N • m		3.0 倍額定輸出力矩 (3.0 times of Nominal Output Torque) (* 最大輸出力矩 Max. Output Torque T_{2B}=60% of Emergency Stop Torque)							
額定輸入轉速 n_{1N} Nominal Input Speed	rpm	1,2	3-200	5000	5000	4000	4000	3000	3000	2000
最大輸入轉速 n_{1max} Max. Input Speed	rpm	1,2	3-200	10000	10000	8000	8000	6000	6000	4000
超精密背隙 Micro Backlash P0	arcmin	1	3-20	-	-	≦3	≦2	≦2	≦2	≦2
		2	15-200	-	-	≦5	≦4	≦4	≦4	≦4
精密背隙 Precision Backlash P1	arcmin	1	3-20	≦5	≦5	≦5	≦4	≦4	≦4	≦4
		2	15-200	≦7	≦7	≦7	≦7	≦7	≦7	≦7
標準背隙 Standard Backlash P2	arcmin	1	3-20	≦7	≦7	≦7	≦6	≦6	≦6	≦6
		2	15-200	≦9	≦9	≦9	≦9	≦9	≦9	≦9
扭轉剛性Torsional Rigidity	N • m /arcmin	1,2	3-200	6	12	30	80	150	450	1000
容許彎曲力矩 M_{2kB} [1] Max. Bending Moment	N • m	1,2	3-200	43	125	288	503	1470	2950	6500
容許軸向力 F_{2aB} [1] Max. Axial Load	N	1,2	3-200	1015	1340	2868	3890	9850	12560	21850
使用溫度 Operating Temp.	°C		3-200	-10 °C ~+90 °C						
使用壽命Service Life	hr		3-200	20,000 (10,000/ 連續運轉 Continuous operation)						
效率 Efficiency	%	1	3-20	≧95%						
		2	15-200	≧92%						
重量 Weight	kg	1	3-20	1.1	2.3	6.6	13.5	25.1	50	85
		2	15-200	1.6	3.2/2.2	8.6/5.3	14.8	26.7	55	88
安裝方向 Mounting Position	-	1,2	3-200	任意方向Any direction						
噪音值 Noise Level [2]	dBA/1m	1,2	3-200	62	64	66	68	70	72	74
防護等級 Protection Class	-	1,2	3-200	IP65						
潤滑 Lubrication	-	1,2	3-200	全合成潤滑油脂 Synthetic Lubricant						

減速機轉動慣量 Inertia(J1)

節數Stage	減速比Ratio	單位unit	PHFR-42	PHFR-60	PHFR-90	PHFR-115	PHFR-142	PHFR-200	PHFR-255
1	3/4/5/7/9	Kg • cm^2	0.06	0.40	2.28	6.87	24.2	69.8	138.2
	10/14/20		0.05	0.30	1.45	4.76	14.5	50.3	103.6
節數Stage	減速比Ratio		PHFR-42	PHFR-60(T)	PHFR-90(T)	PHFR-115T	PHFR-142T	PHFR-200T	PHFR-255T
2	15/20/25/35		0.06	0.40(0.08)	2.28(0.72)	3.02	7.83	27.7	80.3
	others		0.05	0.30(0.06)	1.45(0.38)	1.64	5.00	15.9	55.3

* 1. 輸出轉速 100rpm 時，作用於輸出軸中心位置。Applied to the output shaft center @100rpm.
* 2. 3000rpm 空載量測。Measured at 3000 rpm with no load. These values are measured by gearbox with ratio = 10 (1-stage) or ratio = 100 (2-stage) at nominal input speed or 3000 rpm (if nominal input speed is higher than 3000 rpm) with no load.

※本公司有權對以上數據規格逕行設計變更不先行告知。The above figures/specifications are subject to change without prior notice.

Products due to human error, natural disasters or other factors lead to poor or damaged, will not be covered under warranty.
產品因人為原因或天災等因素導致不良或損壞，不在保固範圍內。


SESAME MOTOR
SESAME MOTOR
SESAME MOTOR

PHF SERIES

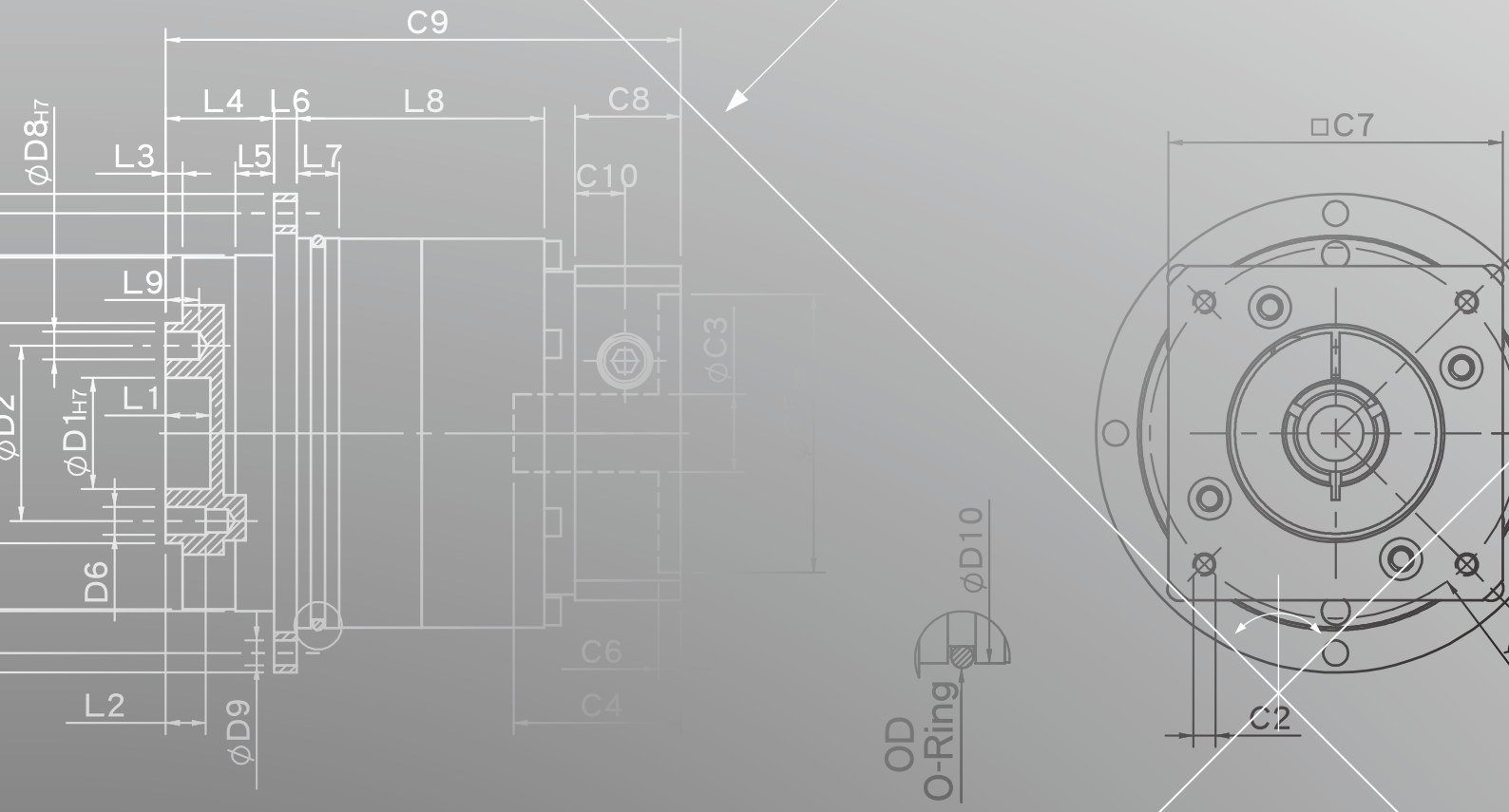
C9
L4
L6
L8
C8
L3
L5
L7
C10
ØD8H7
L9
L1
ØD1H7
ØD2
D6
L2
ØD9
ØC3
C6
C4
ØD10
OD
O-Ring
□C7
C2

C9
L4
L6
L8
C8
L3
L5
L7
C10
L9
L1
D6
L2
C6
C4
C3
C5
D10
D9
OD
O-Ring

□C7
45°
45°
C1
C2


45°
45°
C1


SESAME MOTOR
SESAME MOTOR

PHF SERIES FEATURES　PHF系列 產品特點

齒輪材質選用高級合金鋼，獨特熱處理至最佳硬度，並經過研磨加工，以獲得最佳的精度、高耐磨耗及高耐衝擊韌性。
Alloy steel gear with unique heat treatment. Additionally, with gear grinding process-ing to get the best accuracy, high wear resistance and high impact toughness.

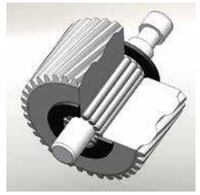

行星齒輪傳動介面採用針狀軸承，滿針排列不含保持器，以達到最大接觸面積最小間隙公差，提高結構剛性及輸出扭力。
Planet gear transmission interface equipped with needle bearings, full needle roller bearings aligned without retainer achieve maximum exposure but smallest gap tolerances. Enhance over-all gear structure rigid and output torque.

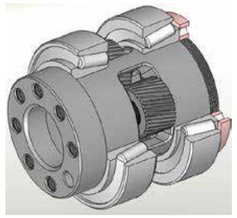

行星固定架及出力軸設計一體成型，且前後使用滾錐軸承，可承受軸向負載及徑向負載大於滾珠軸承，培林設定位置為大跨距，可達到最大扭轉剛性及出力軸高軸向負載及徑向負載能力。
Planetary arm bracket and output shaft are one-piece constructed, using tapered roller bearings can bear the axial load and radial load that are more than deep groove ball bearings. Setting the bearing apart for larger span to reach the largest torsional rigidity and contribute high axial load and radial load capacity.

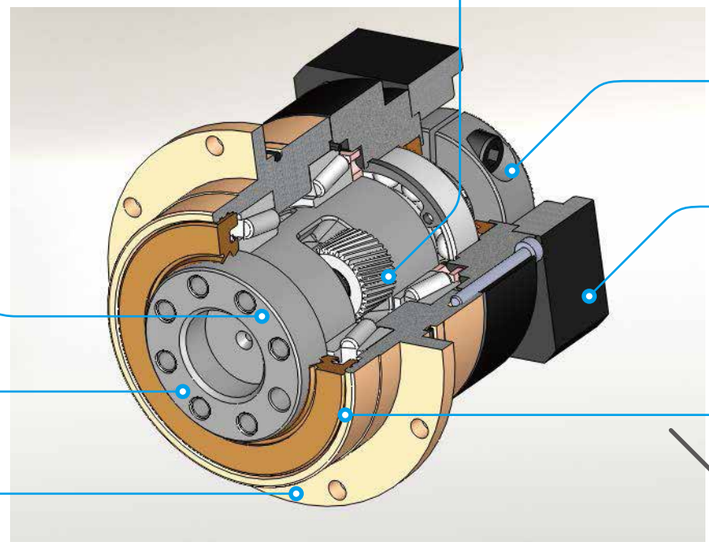

輸入端與馬達入力軸連結方法採用拴緊式機構，鎖緊環經過動平衡分析，確保高轉速下，結合介面的同心度及零滑差動力傳遞。
Input-end and motor shaft are coupled through a dynamic balanced collar clamping mechanism to ensure connection interface concentricity and zero slip power transmission at high speed.

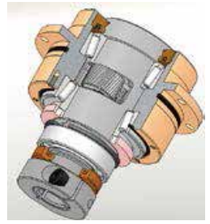

先進馬達連接板設計，配合入力軸襯套，安裝容易，可與各種廠牌之伺服、步進馬達完美搭配組合。
Advanced motor bracket design coupled with the input shaft bushing is easy to mount to any servo or stepper motor.

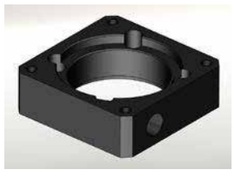

出力軸表面與油封搭配確保最低磨擦係數和減少啓動負載，保持最佳密封性，延長使用壽命且出力軸為中空穴設計，可搭配圓形法蘭面連結，大幅縮小安裝的空間。
Grinding process to smooth surface of output shaft, and with oil seal to minimum friction coefficient and reducing start up load; result in the best seal-ability and extended lifespan. Hollow out-put shaft connect perfectly with circular flange drastically reducing the installation space.

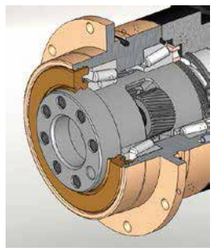

先進無電解鎳表面處理，耐刮，耐腐蝕，最適合高科技設備嚴苛要求。本體齒箱與內環齒一體加工成形，再經德國頂級插齒機加工。具有高精密度，高扭力，耐磨耗等特點。
Advanced electroless nickel plating surface treatment resists scratch and corrosion. Suitable for stringent require of high-tech equipment. The gear box and internal gear ring are one-piece constructed, and then processed with advanced Germany gear shaper machinery for high-precision, high torque and abrade consumption.

PHF系列整體設計上可容許伺服馬達高轉速的輸入，達到最大扭力輸出。出力軸為中空穴設計，可搭配圓型法蘭面連結，大幅縮小安裝的空間。精密斜齒輪設計及專業齒輪加工，製造出低運轉背隙、高效率、低噪音及長壽命的行星減速機。
PHF series overall design suitable for combination operation with servo motor high-speed input and achieves maximum torque output. Hollow out-put shaft connects perfectly with circular flange drastically reducing the installation space. Precision helical gear design and gear processing create a planetary gearhead with low backlash operation, high efficiency, low noise and long lifespan.

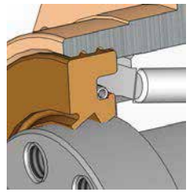

高科技油封設計上唇為防塵唇，下唇為防油唇。採IP65防護等級的密封設計，並採用高級潤滑油脂，不洩漏、免保養。
High-tech oil seal design on the upper lip guard against dust intruder, lower lip to guard against oil leak. Protection grade IP65 safeguards fully avoid leaking problem, and given it maintenance-free.

PHF Single Stage Dimensions PHF單段外型尺寸圖

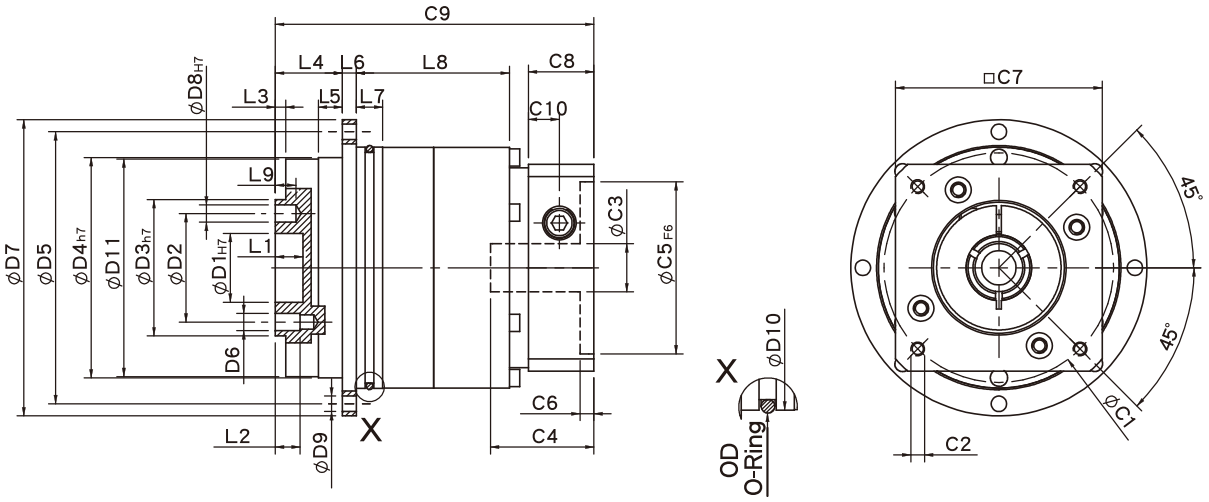

Specifications 規格

Unit:mm

尺寸 Dimensions	PHF42	PHF60	PHF90	PHF115	PHF142	PHF200	PHF255
D1 H7	12	20	31.5	40	50	80	100
D2	20	31.5	50	63	80	125	140
D3 h7	28	40	63	80	100	160	180
D4 h7	47	64	90	110	140	200	255
D5	67	79	109	135	168	233	280
D6	M3x0.5P	M5x0.8P	M6x1.0P	M6x1.0P	M8x1.25P	M10x1.5P	M16x2.0P
D7	72	86	118	145	179	247	300
D8 H7	3	5	6	6	8	10	12
D9	3.4	4.5	5.5	5.5	6.6	9	13.5
D10	60	70	95	120	152	212	255
D11	46.2	63.2	89.2	109.2	139.2	199.2	254.2
L1	4	8	12	12	12	12	20
L2	6	7.2	12	13.5	16	22.5	30.5
L3	3	3	6	6	6	8	12
L4	19.5	19.5	30	29	38	50	66
L5	7	7	10	10	14.6	15	20
L6	4	4	7	8	10	12	18
L7	5	7.7	8	10	12	17	39.5
L8	25	37.5	36.5	54.5	65	92	118
L9	4	6	7	7	7	10	10
C1 [2]	46	70	90	115	145	200	235
C2 [2]	M4x0.7P	M5x0.8P	M6x1.0P	M8x1.25P	M8x1.25P	M12x1.75P	M12x1.75P
C3 [2]	≦8/≦11	≦14/≦19	≦19/≦24	≦24/≦32/≦38	≦35/≦38	≦50	≦55
C4 [2]	28.1	36.5	41.2	51.1	69.7	81	112
C5 [2] F6	30	50	70	95	110	114.3	200
C6 [2]	4	4	6.7	6	8.5	6	6
C7 [2]	42	60	90	115	140	182	220
C8 [2]	16.5	19	25.5	30	38	40	50
C9 [2]	74.8	92.5	107	131.5	171.5	215	271
C10 [2]	7.4	9	11.3	13.9	17.8	21	21
OD	56x2	66x2	90x3	110x3	145x3	200x5	238x5

★ C1~C10 是公製標準馬達連接板尺寸,請依所選用的馬達決定.

★ 本公司有權針對以上數據規格逕行設計變更不先行告知.

★ C1~C10 are motor specific dimensions(metric std shown), Size may vary according to motor flange.

★ Specification subject to change without notice.

PHF Double Stage Dimensions-1 PHF雙段外型尺寸圖-1

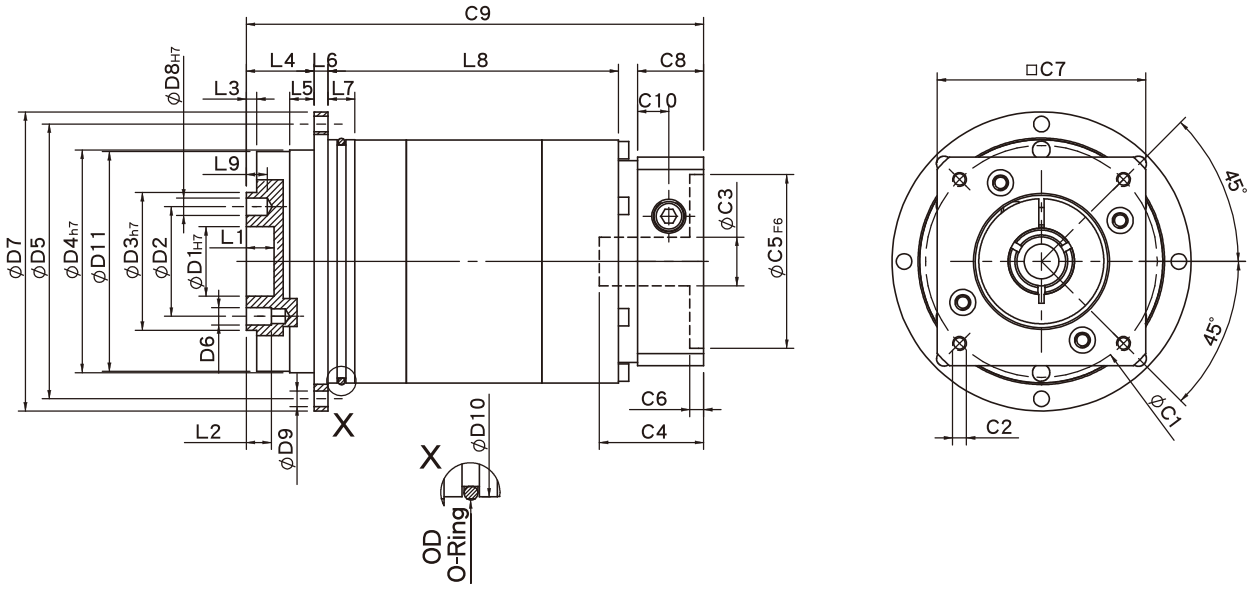

Specifications 規格

Unit:mm

尺寸 Dimensions	PHF42	PHF60	PHF90
D1 H7	12	20	31.5
D2	20	31.5	50
D3 h7	28	40	63
D4 h7	47	64	90
D5	67	79	109
D6	M3x0.5P	M5x0.8P	M6x1.0P
D7	72	86	118
D8 H7	3	5	6
D9	3.4	4.5	5.5
D10	60	70	95
D11	46.2	63.2	89.2
L1	4	8	12
L2	6	7.2	12
L3	3	3	6
L4	19.5	19.5	30
L5	7	7	10
L6	4	4	7
L7	5	7.7	8
L8	54.5	72.5	81.5
L9	4	6	7
C1 [2]	46	70	90
C2 [2]	M4x0.7P	M5x0.8P	M6x1.0P
C3 [2]	≦8/≦11	≦14/≦19	≦19/≦24
C4 [2]	28.1	36.4	41.2
C5 [2] F6	30	50	70
C6 [2]	4	4	6.7
C7 [2]	42	60	90
C8 [2]	16.5	19	25.5
C9 [2]	102.5	127.5	151.1
C10 [2]	7.4	9	11.3
OD	56x2	66x2	90x3

★ C1~C10是公製標準馬達連接板尺寸,請依所選用的馬達決定.

★ 本公司有權針對以上數據規格逕行設計變更不先行告知.

★ C1~C10 are motor specific dimensions(metric std shown), Size may vary according to the motor flange.

★ Specification subject to change without notice.

PHF Double Stage Dimensions-2 PHF雙段外型尺寸圖-2

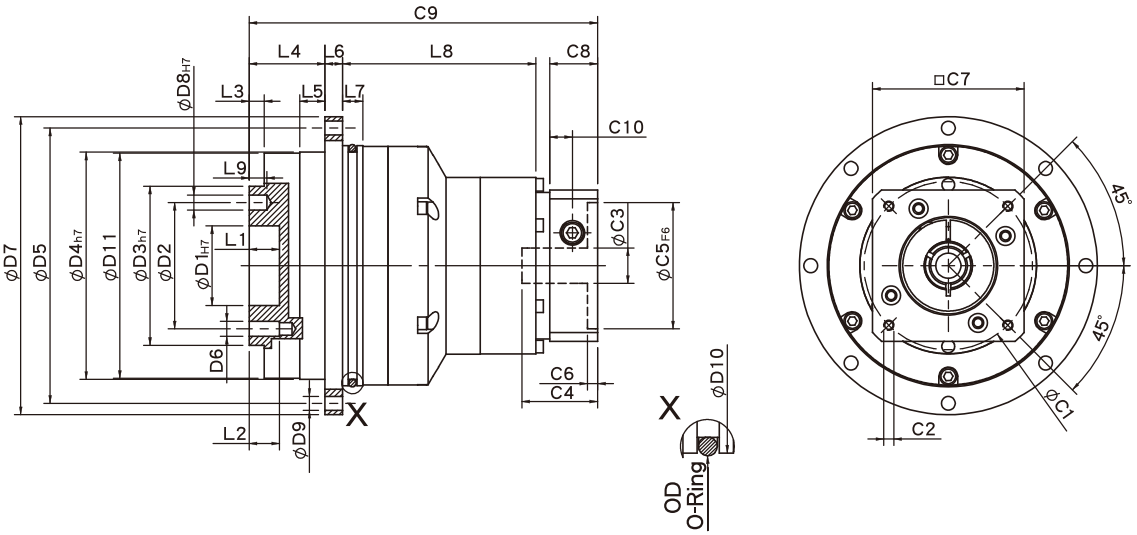

Specifications 規格

Unit:mm

尺寸 Dimensions	PHF60T	PHF90T	PHF115T	PHF142T	PHF200T	PHF255T
D1 H7	20	31.5	40	50	80	100
D2	31.5	50	63	80	125	140
D3 h7	40	63	80	100	160	180
D4 h7	64	90	110	140	200	255
D5	79	109	135	168	233	280
D6	M5x0.8P	M6x1.0P	M6x1.0P	M8x1.25P	M10x1.5P	M16x2.0P
D7	86	118	145	179	247	300
D8 H7	5	6	6	8	10	12
D9	4.5	5.5	5.5	6.6	9	13.5
D10	70	95	120	152	212	255
D11	63.2	89.2	109.2	139.2	199.2	254.2
L1	8	12	12	12	12	20
L2	7.2	12	13.5	16	22.5	30.5
L3	3	6	6	6	8	12
L4	19.5	30	29	38	50	66
L5	7	10	10	14.6	15	20
L6	4	7	8	10	12	18
L7	7.7	8	10	12	17	39.5
L8	65.2	69.5	93.5	110	161.7	192
L9	6	7	7	7	10	10
C1 [2]	46	70	90	115	145	200
C2 [2]	M4x0.7P	M5x0.8P	M6x1.0P	M8x1.25P	M8x1.25P	M12x1.75P
C3 [2]	≦8/≦11	≦14/≦19	≦19/≦24	≦24/≦32/≦38	≦35/≦38	≦50
C4 [2]	28.1	36.5	41.2	51.1	69.7	81
C5 [2] F6	30	50	70	95	110	114.3
C6 [2]	4	4	6.7	6	8.5	6
C7 [2]	42	60	90	115	140	180
C8 [2]	16.5	19	25.5	30	38	40
C9 [2]	113.2	138	163.1	198	281	335
C10 [2]	7.4	9	11.3	13.9	17.8	21
OD	66x2	90x3	110x3	145x3	200x5	238x5

★ C1~C10 是公製標準馬達連接板尺寸,請依所選用的馬達決定.

★ 本公司有權針對以上數據規格逕行設計變更不先行告知.

★ C1~C10 are motor specific dimensions(metric std shown), Size may vary according to motor flange.

★ Specification subject to change without notice.

PHF Flange Dimensions PHF法蘭面尺寸圖

PHF42

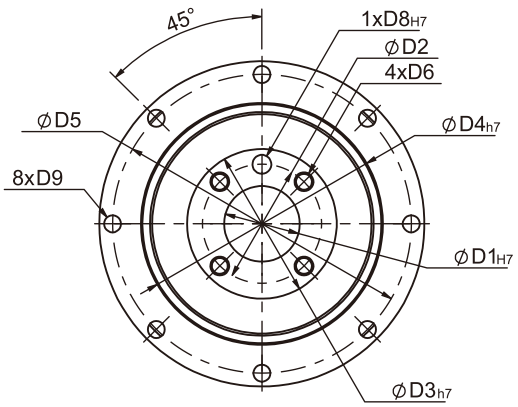

PHF60
PHF90

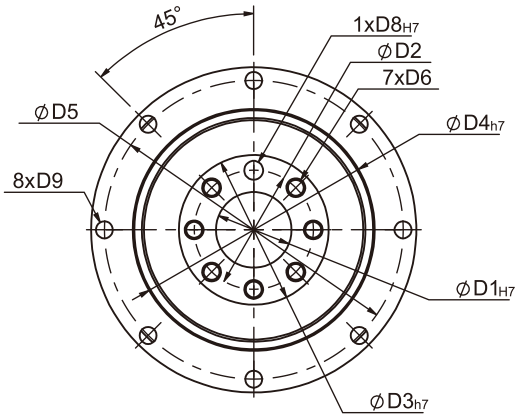

PHF115

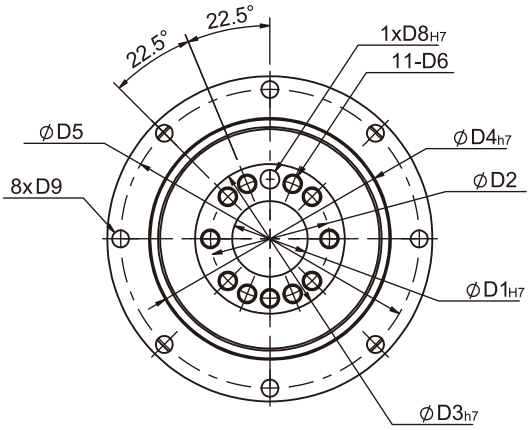

PHF142
PHF200
PHF255

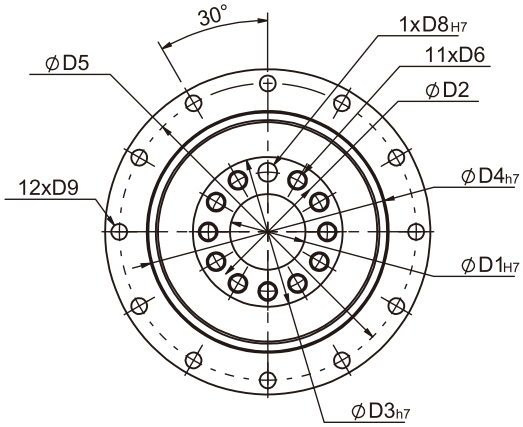

Specifications 規格

Unit:mm

尺寸 Dimensions	PHF42	PHF60	PHF90	PHF115	PHF142	PHF200	PHF255
D1 H7	12	20	31.5	40	50	80	100
D2	20	31.5	50	63	80	125	140
D3 h7	28	40	63	80	100	160	180
D4 h7	47	64	90	110	140	200	255
D5	67	79	109	135	168	233	280
D6	M3x0.5P	M5x0.8P	M6x1.0P	M6x1.0P	M8x1.25P	M10x1.5P	M16x2.0P
D8 H7	3	5	6	6	8	10	12
D9	3.4	4.5	5.5	5.5	6.6	9	13.5

★ 本公司有權針對以上數據規格逕行設計變更不先行告知. ★ Specification subject to change without notice.

PHF Specifications Table PHF性能規格共表

規格 Specifications		節數 Stage	減速比 Ratio	PHF-42	PHF-60	PHF-90	PHF-115	PHF-142	PHF-200	PHF-255
額定輸出力矩 T_{2N} Nominal Output Torque	N • m	1	3	-	40	105	180	340	580	1100
			4	16	43	110	240	500	1100	1700
			5	17	50	130	290	600	1200	2000
			7	14	44	125	270	530	1100	1750
			10	11	37	95	220	430	900	1450
		節數 Stage	減速比 Ratio	PHF-42	PHF-60 (T)	PHF-90(T)	PHF-115T	PHF-142T	PHF-200T	PHF-255T
		2	15	-	40	105	180	600	1200	2000
			20	16	43	110	240	600	1200	2000
			25	17	50	130	290	600	1200	2000
			30	17	50	130	290	600	1200	2000
			35	17	50	130	290	600	1200	2000
			40	17	50	130	290	600	1200	2000
			50	17	50	130	290	600	1200	2000
			70	14	44	125	270	530	1100	1750
			100	11	37	95	220	430	900	1450
急停力矩 T_{2NOT} Emergency Stop Torque	N • m		3.0 倍額定輸出力矩 (3.0 times of Nominal Output Torque) (* 最大輸出力矩 Max. Output Torque T_{2B}=60% of Emergency Stop Torque)							
額定輸入轉速 n_{1N} Nominal Input Speed	rpm	1,2	3-100	5000	5000	4000	4000	3000	3000	2000
最大輸入轉速 n_{1max} Max. Input Speed	rpm	1,2	3-100	10000	10000	8000	8000	6000	5000	4000
超精密背隙 Micro Backlash P0	arcmin	1	3-10	≦2	≦2	≦2	≦1	≦1	≦1	≦1
		2	12-100	≦4	≦4	≦4	≦3	≦3	≦3	≦3
精密背隙 Precision Backlash P1	arcmin	1	3-10	≦4	≦4	≦4	≦3	≦3	≦3	≦3
		2	12-100	≦6	≦6	≦6	≦5	≦5	≦5	≦5
標準背隙 Standard Backlash P2	arcmin	1	3-10	≦6	≦6	≦6	≦5	≦5	≦5	≦5
		2	12-100	≦8	≦8	≦8	≦7	≦7	≦7	≦7
扭轉剛性Torsional Rigidity	N • m /arcmin	1,2	3-100	6	12	30	80	150	450	1000
容許彎曲力矩 M_{2kB} [1] Max. Bending Moment	N • m	1,2	3-100	43	125	288	503	1470	2950	6080
容許軸向力 F_{2aB} [1] Max. Axial Load	N	1,2	3-100	1015	1340	2868	3890	9850	12560	21850
使用溫度 Operating Temp.	°C		3-100	-10 °C ~+90 °C						
使用壽命Service Life	hr		3-100	30,000 (15,000/ 連續運轉 Continuous operation)						
效率 Efficiency	%	1	3-10	≧97%						
		2	12-100	≧94%						
重量 Weight	kg	1	3-10	0.7	1.5	3.3	6.2	13.6	32.1	63.3
		2	12-100	1.1	2.3(1.8)	6.0(4.1)	8.1	17.9	38.6	79.5
安裝方向 Mounting Position	-	1,2	3-100	任意方向Any direction						
噪音值 Noise Level [2]	dBA/1m	1,2	3-100	56	58	60	63	65	67	70
防護等級 Protection Class	-	1,2	3-100	IP65						
潤滑 Lubrication	-	1,2	3-100	全合成潤滑油脂 Synthetic Lubricant						

減速機轉動慣量 Inertia(J1)

節數Stage	減速比Ratio	單位unit	PHF-42	PHF-60	PHF-90	PHF-115	PHF-142	PHF-200	PHF-255
1	3	Kg • cm²	-	0.19	0.72	2.35	9.05	29.80	72.50
	4		0.02	0.18	0.67	1.66	7.17	25.86	58.21
	5		0.02	0.17	0.65	1.50	6.52	23.63	54.36
	7		0.02	0.14	0.60	1.45	6.17	22.92	54.12
	10		0.02	0.14	0.58	1.41	6.10	22.73	53.98
節數Stage	減速比Ratio		PHF-42	PHF-60(T)	PHF-90(T)	PHF-115T	PHF-142T	PHF-200T	PHF-255T
2	15/20		0.02	0.17(0.02)	0.65(0.17)	0.65	2.35	9.05	29.8
	25/30/35/40		0.02	0.14(0.02)	0.60(0.14)	0.60	1.45	6.17	22.92
	50/70/100		0.02	0.14(0.02)	0.58(0.14)	0.58	1.41	6.10	22.73

* 1. 輸出轉速 100rpm 時，作用於輸出軸中心位置。Applied to the output shaft center @100rpm.
* 2. 3000rpm 空載量測。Measured at 3000 rpm with no load. These values are measured by gearbox with ratio = 10 (1-stage) or ratio = 100 (2-stage) at nominal input speed or 3000 rpm (if nominal input speed is higher than 3000 rpm) with no load.

※本公司有權對以上數據規格逕行設計變更不先行告知。The above figures/specifications are subject to change without prior notice.

Products due to human error, natural disasters or other factors lead to poor or damaged, will not be covered under warranty.
產品因人為原因或天災等因素導致不良或損壞，不在保固範圍內。


SESAME MOTOR
SESAME MOTOR
SESAME MOTOR

PGH SERIES

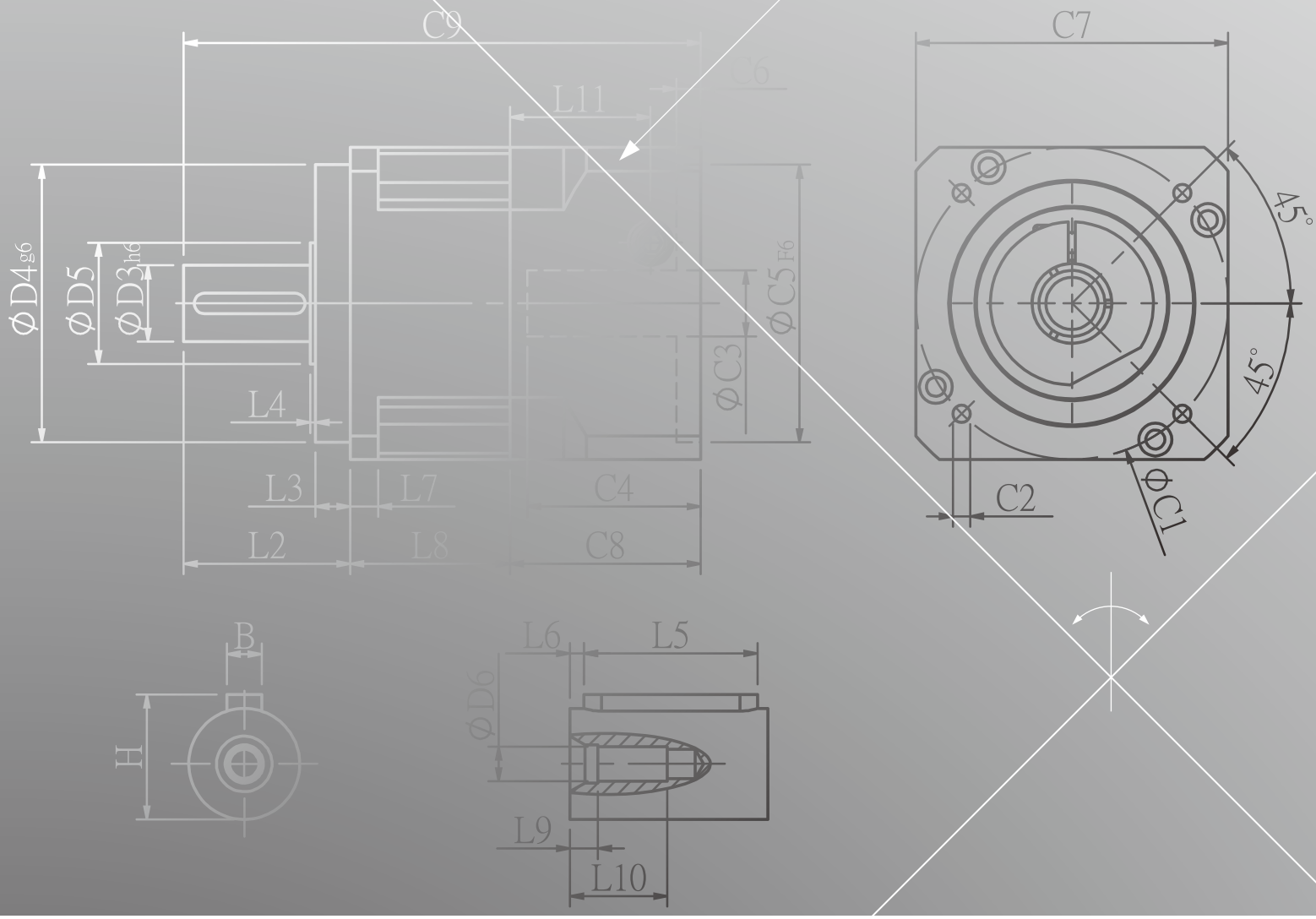
C9
C6
L11
C7
ØD4g6
ØD5
ØD3h6
ØC5F6
ØC3
L4
L3
L7
C4
L2
L8
C8
45°
45°
C2
ØC1
B
H
L6
L5
ØD6
L9
L10

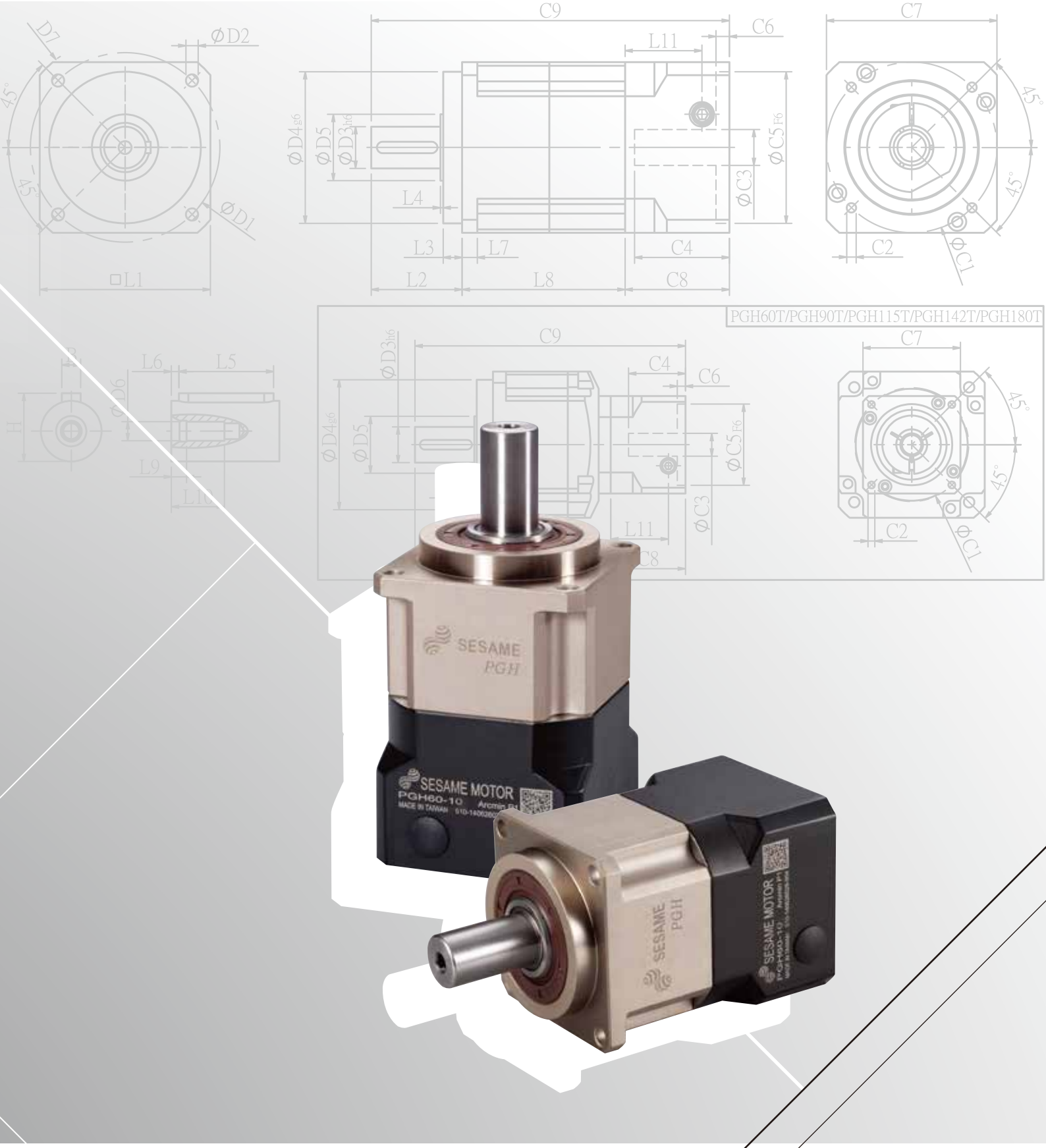
C9
C6
L11
C7
D7
ØD2
45°
ØD4g6
ØD5
ØD3h6
ØC5F6
ØC3
L4
ØD1
L3
L7
C4
C2
ØC1
□L1
L2
L8
C8
PGH60T/PGH90T/PGH115T/PGH142T/PGH180T
ØD3h6
C9
C4
C6
C7
L6
L5
ØD6
H
ØD4g6
ØD5
ØC5F6
L9
L10
ØC3
L11
C8
C2
ØC1
SESAME
PGH
SESAME MOTOR
PGH60-10
MADE IN TAIWAN

PGH Single Stage Dimensions PGH單段外型尺寸圖

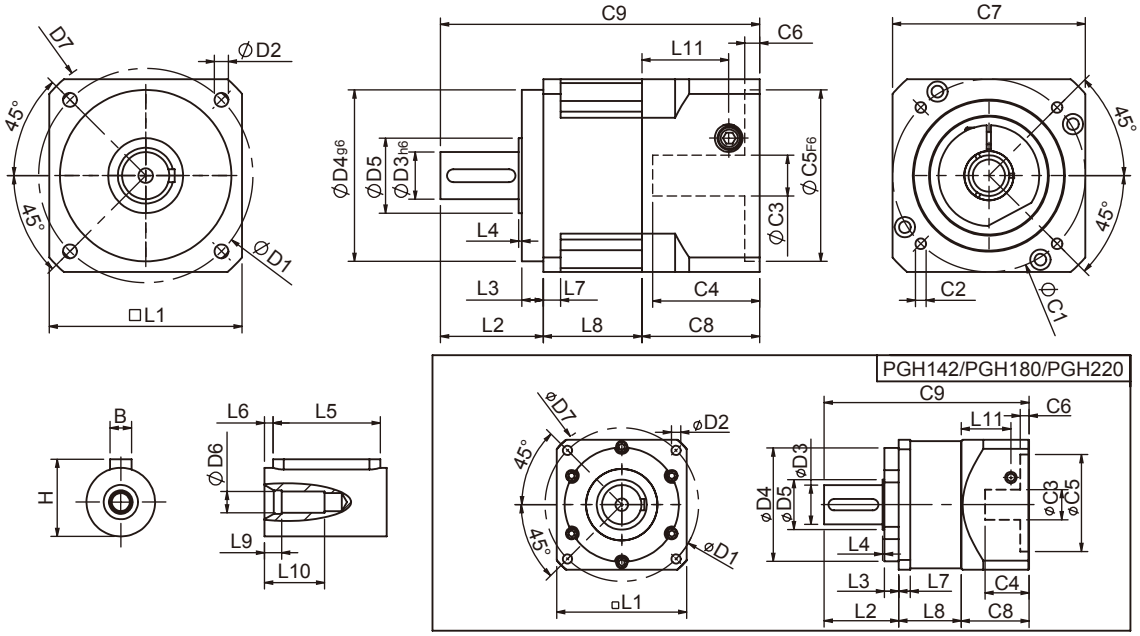

Specifications 規格

Unit:mm

尺寸 Dimensions	PGH42	PGH60	PGH90	PGH115	PGH142	PGH180	PGH220
D1	50	70	100	130	165	215	250
D2	3.4	5.5	6.5	8.5	10.5	13	17
D3 h6	13	16	22	32	40	55	75
D4 g6	35	50	80	110	130	160	180
D5	15	25	35	45	50	70	114.4
D6	M4x0.7P	M5x0.8P	M8x1.25P	M12x1.75P	M16x2.0P	M20x2.5P	M20x2.5P
D7	56	80	118	148	186	239	292
L1	42.6	60	90	115	142	182	220
L2	26	37	48	63	91.5	100.5	138
L3	5.5	7	10	10	10	16	30
L4	1	1.5	1.5	3.5	2.5	2.5	3
L5	15	25	32	40	60	70	90
L6	2	2	3	5	5	6	7
L7	4	6	8	11	16	18	20
L8	28.3	37	46	57	75.5	94	111
L9	4	4	4.5	6	6	8	15
L10	14	16.5	20.5	30	38	48	42
L11	29	35.5	40.5	42	63	69.5	96
C1 [2]	46	70	90	115	145	200	235
C2 [2]	M4x0.7P	M5x0.8P	M6x1.0P	M8x1.25P	M8x1.25P	M12x1.75P	M12x1.75P
C3 [2]	≦8/≦11	≦14/≦19	≦19/≦24	≦24/≦32/≦38	≦35/≦38	≦50	≦55
C4 [2]	27	37	47	56	66.5	82	112
C5 [2] F6	30	50	70	95	110	114.3	200
C6 [2]	4	4	6	10	6	13	6
C7 [2]	42.6	60	90	115	140	180	220
C8 [2]	38.5	46	55	63	80	95	120
C9 [2]	92.8	120	149	183	247	289.5	369
B	5	5	6	10	12	16	20
H	15	18	24.5	35	43	59	79.5

★ C1~C9是公製標準馬達連接板尺寸,請依所選用的馬達決定.

★ 本公司有權針對以上數據規格逕行設計變更不先行告知.

★ C1~C9 are motor specific dimensions(metric std shown), Size may vary according to the motor flange chosen.

★ Specification subject to change without notice.

PGH Double Stage Dimensions-1 PGH雙段外型尺寸圖-1

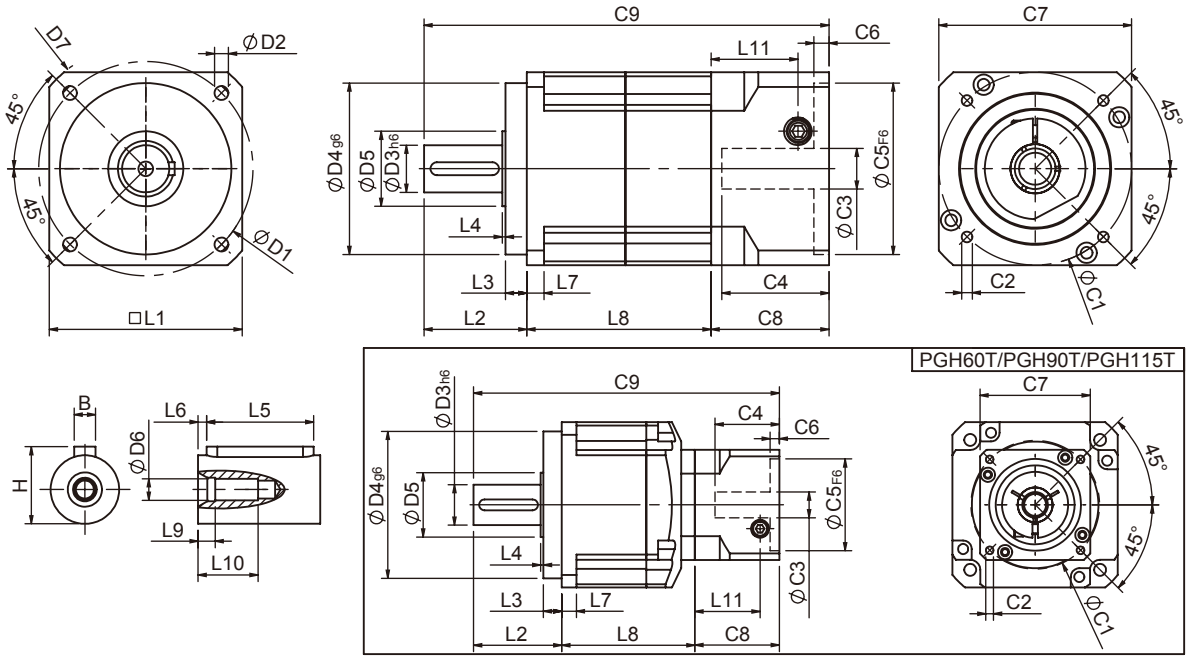

Specifications 規格

Unit:mm

尺寸 Dimensions	PGH42	PGH60	PGH60T	PGH90	PGH90T	PGH115T
D1	50	70		100		130
D2	3.4	5.5		6.5		8.5
D3h6	13	16		22		32
D4g6	35	50		80		110
D5	15	25		35		45
D6	M4x0.7P	M5x0.8P		M8x1.25P		M12x1.75P
D7	56	80		118		148
L1	42.6	60		90		115
L2	26	37		48		63
L3	5.5	7		10		10
L4	1	1.5		1.5		3.5
L5	15	25		32		40
L6	2	2		3		5
L7	4	6		8		11
L8	55.3	70	65.5	86	78.5	99.5
L9	4	4		4.5		6
L10	14	16.5		20.5		30
L11	29	35.5	29	40.5	35.5	40.5
C1 [2]	46	70	46	90	70	90
C2 [2]	M4x0.7P	M5x0.8P	M4x0.7P	M6x1.0P	M5x0.8P	M6x1.0P
C3 [2]	≦8/≦11	≦14/≦19	≦8/≦11	≦19/≦24	≦14	≦19/≦24
C4 [2]	27	37	27	47	37	47
C5 [2] F6	30	50	30	70	50	70
C6 [2]	4	4	4	6	4	6
C7 [2]	42.6	60	42.6	90	60	90
C8 [2]	38.5	46	38.5	55	46	55
C9 [2]	119.8	153	141	189	172.5	217.5
B	5	5		6		10
H	15	18		24.5		35

★ C1~C9是公製標準馬達連接板尺寸,請依所選用的馬達決定.

★ 本公司有權針對以上數據規格逕行設計變更不先行告知.

★ C1~C9 are motor specific dimensions(metric std shown), Size may vary according to the motor flange chosen.

★ Specification subject to change without notice.

PGH Double Stage Dimensions-2 PGH雙段外型尺寸圖-2

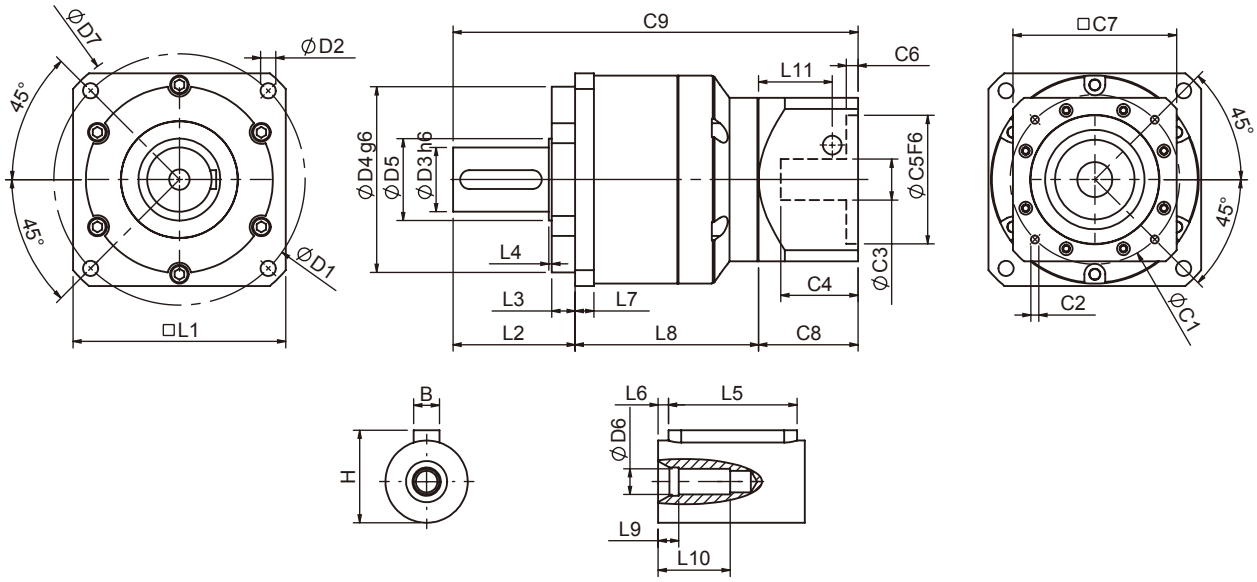

Specifications 規格

Unit:mm

尺寸 Dimensions	PGH142T	PGH180T	PGH220T
D1	165	215	250
D2	10.5	13	17
D3h6	40	55	75
D4g6	130	160	180
D5	50	70	114.4
D6	M16x2.0P	M20x2.5P	M20x1.5P
D7	186	239	292
L1	142	182	220
L2	91.5	100.5	138
L3	10	16	30
L4	2.5	2.5	3
L5	60	70	90
L6	5	6	7
L7	16	18	20
L8	127.5	166	202
L9	6	8	15
L10	38	48	42
L11	42	63	74
C1 [2]	115	145	200
C2 [2]	M8x1.25P	M8x1.25P	M12x1.75P
C3 [2]	≦24/≦32/≦38	≦35/≦38	≦50
C4 [2]	56	66.5	81
C5 [2] F6	95	110	114.3
C6 [2]	10	6	6
C7 [2]	115	140	180
C8 [2]	63	80	93
C9 [2]	282	346.5	433
B	12	16	20
H	43	59	79.5

★ C1~C9是公製標準馬達連接板尺寸,請依所選用的馬達決定.

★ 本公司有權針對以上數據規格逕行設計變更不先行告知.

★ C1~C9 are motor specific dimensions(metric std shown), Size may vary according to the motor flange chosen.

★ Specification subject to change without notice.

PGH Specifications Table PGH性能規格共表

規格 Specifications		節數 Stage	減速比 Ratio	PGH-42	PGH-60	PGH-90	PGH-115	PGH-142	PGH-180	PGH-220
額定輸出力矩 T_{2N} Nominal Output Torque	N • m	1	3	19	53	145	290	520	950	1100
			4	20	55	150	300	550	1000	1700
			5	17	54	140	290	600	1050	2000
			6	15	46	135	280	560	1000	1850
			7	14	44	125	270	530	960	1750
			8	12	41	110	240	480	900	1550
			9	11	37	95	220	430	800	1500
			10	11	37	95	220	430	800	1450
		節數 Stage	減速比 Ratio	PGH-42	PGH-60 (T)	PGH-90(T)	PGH-115T	PGH-142T	PGH-180T	PGH-220T
		2	15	19	53	145	290	520	950	2000
			20	20	55	150	300	550	1000	2000
			25	17	54	140	290	600	1050	2000
			30	17	54	140	290	600	1050	2000
			35	17	54	140	290	600	1050	2000
			40	17	54	140	290	600	1050	2000
			45	17	54	140	290	600	1050	2000
			50	17	54	140	290	600	1050	2000
			60	15	46	135	280	560	1000	1850
			70	14	44	125	270	530	960	1750
			80	12	41	110	240	480	900	1550
			90	11	37	95	220	430	800	1500
			100	11	37	95	220	430	800	1450
急停力矩 T_{2NOT} Emergency Stop Torque	N • m		3.0 倍額定輸出力矩 (3.0 times of Nominal Output Torque) (* 最大輸出力矩 Max. Output Torque T_{2B}=60% of Emergency Stop Torque)							
額定輸入轉速 n_{1N} Nominal Input Speed	rpm	1,2	3-100	5000	5000	4000	4000	3000	3000	2000
最大輸入轉速 n_{1max} Max. Input Speed	rpm	1,2	3-100	10000	10000	8000	8000	6000	6000	4000
超精密背隙 Micro Backlash P0	arcmin	1	3-10	≦2	≦2	≦2	≦1	≦1	≦1	≦1
		2	15-100	≦4	≦4	≦4	≦3	≦3	≦3	≦3
精密背隙 Precision Backlash P1	arcmin	1	3-10	≦4	≦4	≦4	≦3	≦3	≦3	≦3
		2	15-100	≦6	≦6	≦6	≦5	≦5	≦5	≦5
標準背隙 Standard Backlash P2	arcmin	1	3-10	≦6	≦6	≦6	≦5	≦5	≦5	≦5
		2	15-100	≦8	≦8	≦8	≦7	≦7	≦7	≦7
扭轉剛性Torsional Rigidity	N • m /arcmin	1,2	3-100	2.5	6	12	23	50	145	220
容許徑向力 F_{2rB} [1] Max. Radial Load	N	1,2	3-100	760	1570	2780	5340	9000	14000	31810
容許軸向力 F_{2aB} [1] Max. Axial Load	N	1,2	3-100	410	750	1870	3310	4670	6460	18530
使用溫度 Operating Temp.	°C		3-100	-10 °C ~+90 °C						
使用壽命Service Life	hr		3-100	20,000 (10,000/ 連續運轉 Continuous operation)						
效率 Efficiency	%	1	3-10	≧97%						
		2	15-100	≧94%						
重量 Weight	kg	1	3-10	0.6	1.3	3.5	7.8	16.1	27	55
		2	15-100	0.9	2.0/1.6	5.6/3.9	9.5	19	34	68.5
安裝方向 Mounting Position	-	1,2	3-100	任意方向Any direction						
噪音值 Noise Level [2]	dBA/1m	1,2	3-100	56	58	60	63	65	67	70
防護等級 Protection Class	-	1,2	3-100	IP65						
潤滑 Lubrication	-	1,2	3-100	全合成潤滑油 Synthetic Lubricant						

減速機轉動慣量 Inertia(J1)

節數Stage	減速比Ratio	單位unit	PGH-42	PGH-60	PGH-90	PGH-115	PGH-142	PGH-180	PGH-220
1	3	Kg • cm^2	0.03	0.23	0.97	2.35	10.00	30.50	79.50
	4		0.02	0.18	0.67	1.66	7.17	25.86	58.21
	5		0.02	0.17	0.65	1.50	6.52	23.63	54.36
	6/7/8		0.02	0.14	0.60	1.45	6.17	22.92	54.12
	9/10		0.02	0.14	0.58	1.41	6.10	22.73	53.98
節數Stage	減速比Ratio		PGH-42	PGH-60(T)	PGH-90(T)	PGH-115T	PGH-142T	PGH-180T	PGH-220T
2	15/20/25		0.02	0.17(0.02)	0.65(0.17)	0.65	1.50	6.52	23.63
	30/35/40		0.02	0.14(0.02)	0.60(0.14)	0.60	1.45	6.17	22.92
	45/50/60/70/80/90/100		0.02	0.14(0.02)	0.58(0.14)	0.58	1.41	6.10	22.73

* 1. 輸出轉速 100rpm 時，作用於輸出軸中心位置。Applied to the output shaft center @100rpm.
* 2. 3000rpm 空載量測。Measured at 3000 rpm with no load. These values are measured by gearbox with ratio = 10 (1-stage) or ratio = 100 (2-stage) at nominal input speed or 3000 rpm (if nominal input speed is higher than 3000 rpm) with no load.

※本公司有權對以上數據規格逕行設計變更不先行告知。The above figures/specifications are subject to change without prior notice.

Products due to human error, natural disasters or other factors lead to poor or damaged, will not be covered under warranty.
產品因人為原因或天災等因素導致不良或損壞，不在保固範圍內。

PUR SERIES

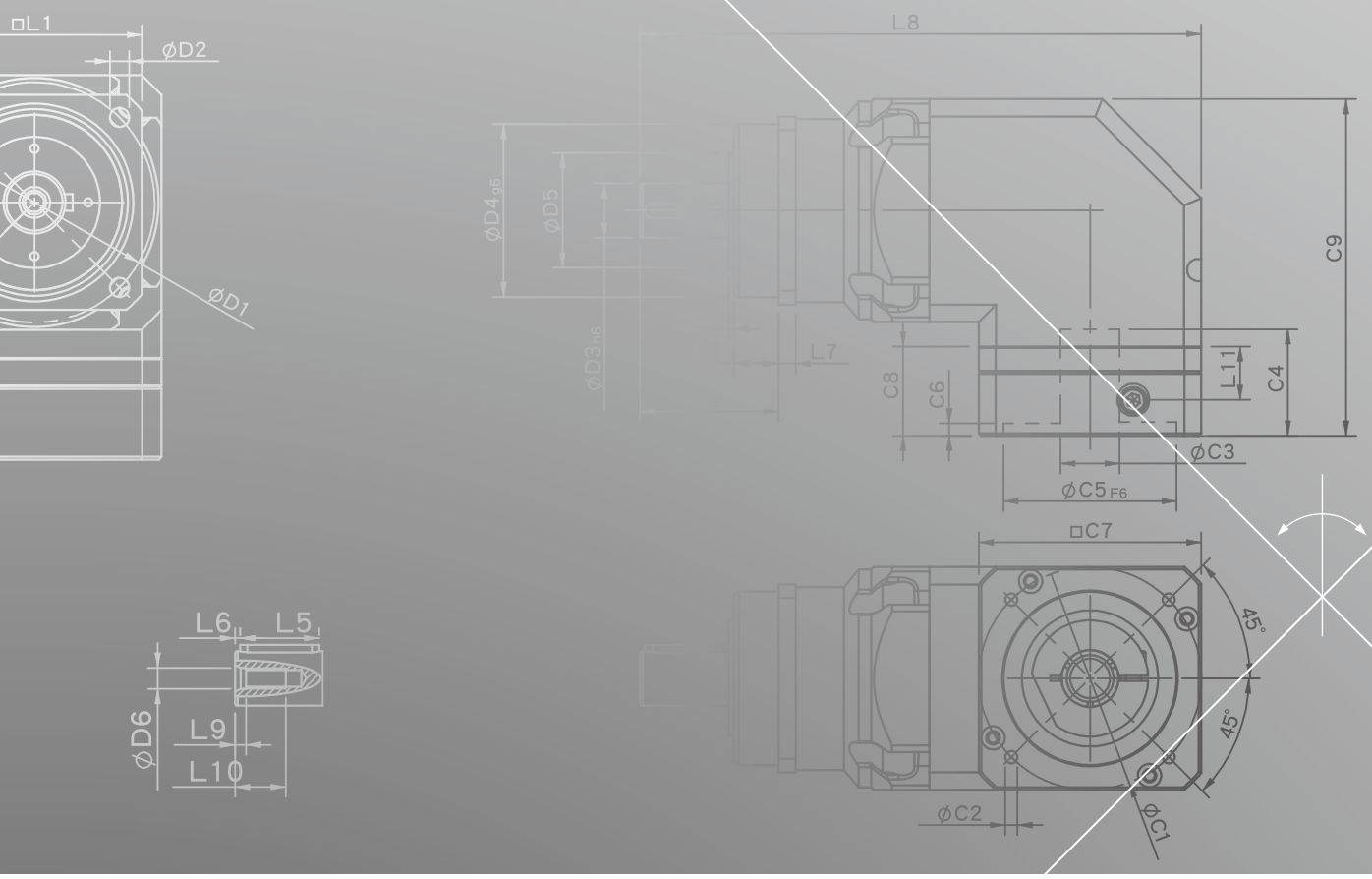
□L1
ØD2
ØD1
L8
ØD4g6
ØD5
ØD3h6
L7
C8
C6
C9
L11
C4
ØC3
ØC5F6
□C7
45°
45°
ØC2
ØC1
L6
L5
ØD6
L9
L10

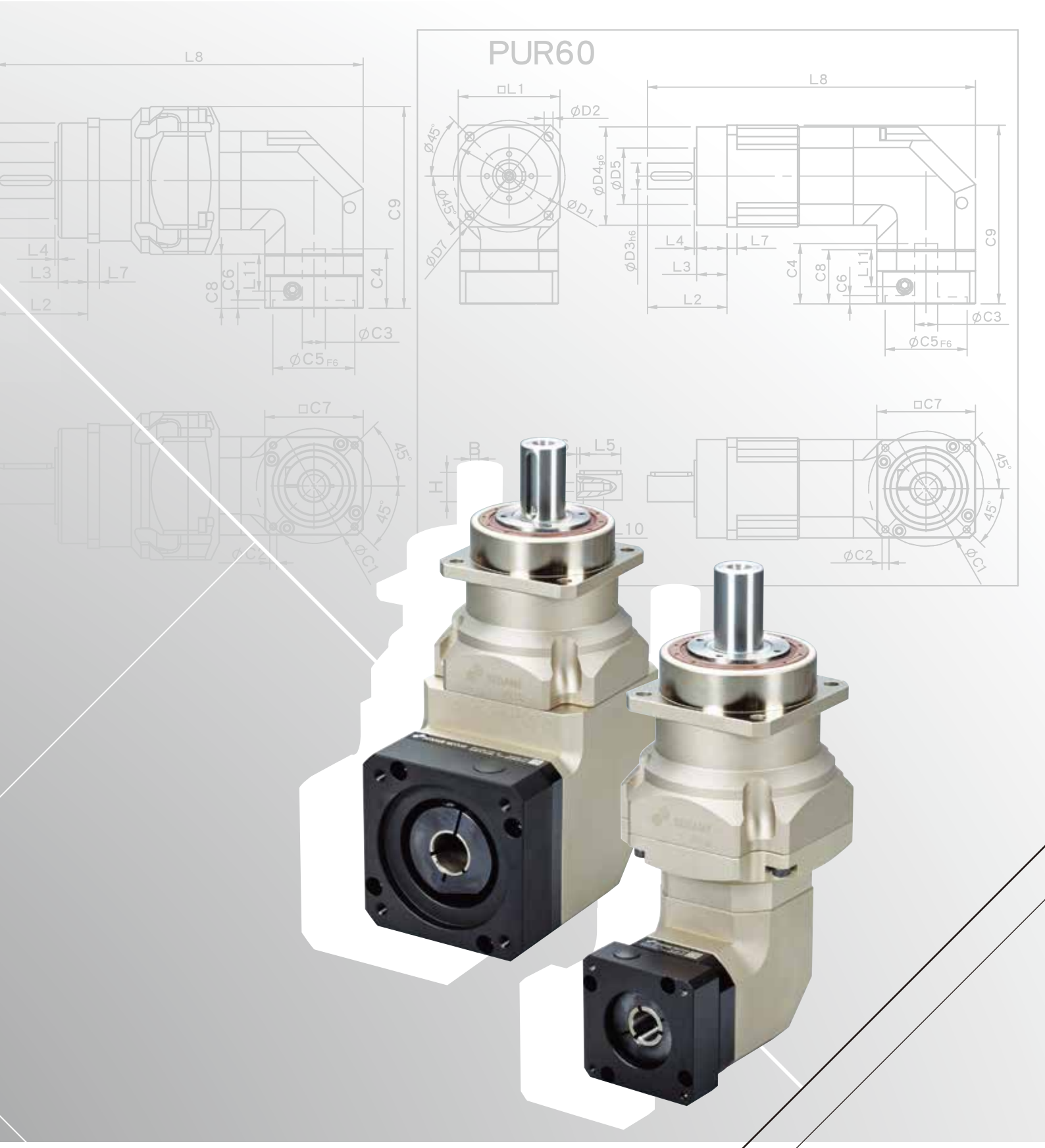
PUR60
L8
□L1
ØD2
Ø45°
ØD1
ØD7
ØD4g6
ØD5
ØD3h6
L4
L7
L3
L2
C4
C8
C6
L11
C9
ØC3
ØC5F6
□C7
B
L5
H
L10
ØC2
ØC1

PUR Single Stage Dimensions PUR單段外型尺寸圖

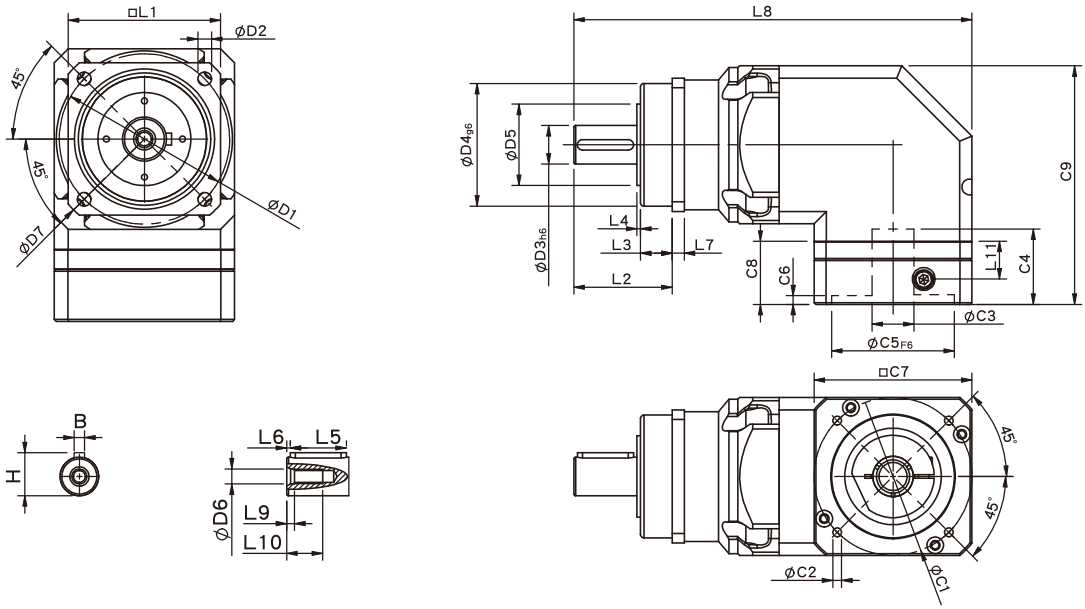

Specifications 規格

Unit:mm

尺寸	PUR60	PUR75	PUR100	PUR140	PUR180	PUR220
D1 H7	68	85	120	165	215	250
D2	5.5	6.8	9	11	13	17
D3 h6	16	22	32	40	55	75
D4 g6	60	70	90	130	160	180
D5	34.4	46.4	59.6	79.2	94.5	114.4
D6	M5x0.8P	M8x1.25P	M12x1.75P	M16x2.0P	M20x2.5P	M20x2.5P
D7	80	100	138	186	239	292
L1	62	76	105	142	180	220
L2	48.5	56	88	112	112	138
L3	18.5	18	28	27	27	30
L4	1.5	2	2	3	3	3
L5	25	32	40	60	70	90
L6	2	2	5	5	6	7
L7	6	7	10	12	15	20
L8	166.7	227	260.5	346.2	414.7	490.2
L9	4	4.5	6	6	8	15
L10	16.5	20.5	30	38	48	42
L11	22.5	21.5	31.8	44.7	44	60
C1 *	70	90	115	145	200	215
C2 *	M5x0.8P	M6x1.0P	M8x1.25P	M8x1.25P	M12x1.75P	M12x1.75P
C3 *	≦14/≦19	≦19/≦24	≦24/≦32	≦35	≦50	≦55
C4 *	34	45	53.5	76.8	78.8	98.7
C5 F6 *	50	70	95	110	114.3	180
C6 *	4	4	6	5.5	6	6
C7 *	60	90	115	140	180	220
C8 *	33	36	48	65	65	85
C9 *	108.8	136	174.5	207	247.5	287.5
B	5	6	10	12	16	20
H	18	24.5	35	43	59	79.5

★ C1~C9是公製標準馬達連接板尺寸,請依所選用的馬達決定.

★ 本公司有權針對以上數據規格逕行設計變更不先行告知.

★ C1~C9 are motor specific dimensions(metric std shown), Size may vary according to motor flange.

★ Specification subject to change without notice.

PUR Double Stage Dimensions PUR雙段外型尺寸圖

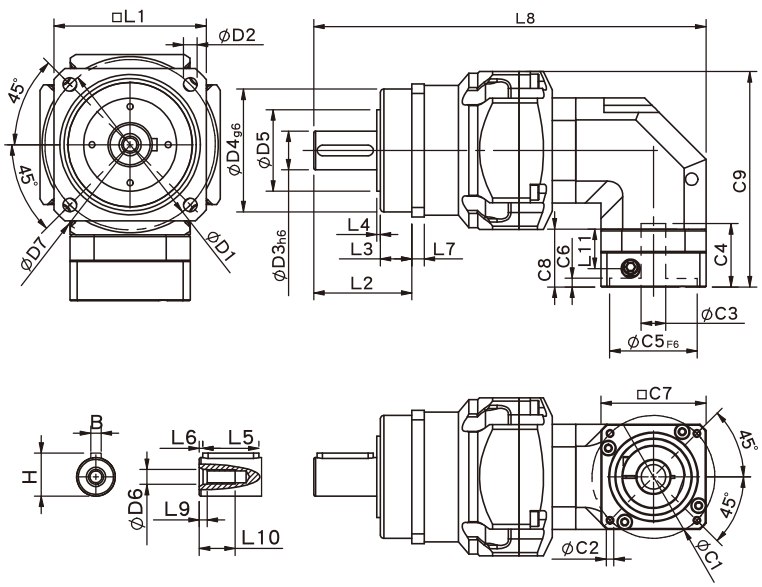

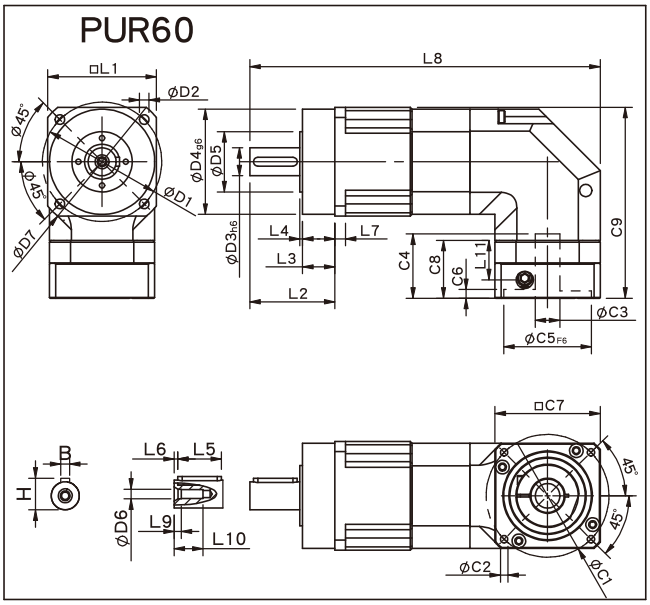

Specifications 規格

Unit:mm

尺寸 Dimensions	PUR60	PUR60T	PUR75T	PUR100T	PUR140T	PUR180T	PUR220T
D1	68	68	85	120	165	215	250
D2	5.5	5.5	6.8	9	11	13	17
D3 h6	16	16	22	32	40	55	75
D4 g6	60	60	70	90	130	160	180
D5	34.4	34.6	46.4	59.6	79.2	94.5	114.4
D6	M5x0.8P	M5x0.8P	M8x1.25P	M12x1.75P	M16x2.0P	M20x2.5P	M20X2.5P
D7	80	80	100	138	186	239	292
L1	62	62	76	105	142	180	220
L2	48.5	48.5	56	88	112	112	138
L3	18.5	18.5	18	28	27	27	30
L4	1.5	1.5	2	2	3	3	3
L5	25	25	32	40	60	70	90
L6	2	2	2	5	5	6	7
L7	6	6	7	10	12	15	20
L8	199.7	170.3	223.7	286.5	358.5	445.4	537.2
L9	4	4	4.5	6	6	8	15
L10	16.5	16.5	20.5	30	38	48	42
L11	22.5	15.5	22.5	21.5	31.8	44.7	44
C1 [2]	70	46	70	90	115	145	200
C2 [2]	M5x0.8P	M4x0.7P	M5x0.8P	M6x1.0P	M8x1.25P	M8x1.25P	M12x1.75P
C3 [2]	≦14/≦19	≦8/≦11	≦14/≦19	≦19/≦24	≦24/≦32	≦35	≦50
C4 [2]	34	29	34	45	53.5	76.8	78.8
C5 [2] F6	50	30	50	70	95	110	114.3
C6 [2]	4	4	4	6	6	5.5	6
C7 [2]	60	42.6	60	90	115	140	180
C8 [2]	33	25	33	36	48	65	65
C9 [2]	108.8	80.5	122.8	148.5	188	223.5	267.5
B	6	5	6	10	12	16	20
H	18	18	24.5	35	43	59	79.5

★ C1~C9是公製標準馬達連接板尺寸,請依所選用的馬達決定.

★ 本公司有權針對以上數據規格逕行設計變更不先行告知.

★ C1~C9 are motor specific dimensions(metric std shown), Size may vary according to the motor flange chosen.

★ Specification subject to change without notice.

PUR Specifications Table PUR性能規格共表

規格 Specifications		節數 Stage	減速比 Ratio	PUR-60	PUR-75	PUR-100	PUR-140	PUR-180	PUR-220
額定輸出力矩 T_{2N} Nominal Output Torque	N • m	1	3	53	145	180	340	580	950
			4	55	150	240	500	1100	1500
			5	54	140	290	600	1200	1800
			6	46	135	280	500	1100	1620
			7	44	125	270	530	1100	1750
			8	41	110	240	470	1000	1550
			9	37	95	220	430	900	1500
			10	50	130	260	540	900	1500
			14	44	125	270	530	1100	1750
			20	37	95	220	430	900	1450
		節數 Stage	減速比 Ratio	PUR-60 (T)	PUR-75T	PUR-100T	PUR-140T	PUR-180T	PUR-220T
		2	15	53	145	180	600	1200	2000
			20	55	150	240	600	1200	2000
			25	54	140	290	600	1200	2000
			30	53	145	180	600	1200	2000
			35	54	140	290	600	1200	2000
			40	55	150	240	600	1200	2000
			45	54	140	290	600	1200	2000
			50	54	140	290	600	1200	2000
			60	46	135	280	560	1100	1850
			70	44	125	270	530	1100	1750
			80	41	110	240	480	1000	1550
			90	37	95	220	430	900	1500
			100	37	95	220	430	900	1450
			120	46	135	280	560	1100	1850
			140	44	125	270	530	1100	1750
			160	41	110	240	480	1000	1550
			180	37	95	220	430	900	1500
			200	37	95	220	430	900	1450
急停力矩 T_{2NOT} Emergency Stop Torque	N • m		3.0 倍額定輸出力矩 (3.0 times of Nominal Output Torque) (* 最大輸出力矩 Max. Output Torque T_{2B}=60% of Emergency Stop Torque)						
額定輸入轉速 n_{1N} Nominal Input Speed	rpm	1,2	3-200	5000	4000	4000	3000	3000	2000
最大輸入轉速 n_{1max} Max. Input Speed	rpm	1,2	3-200	10000	8000	8000	6000	6000	4000
超精密背隙 Micro Backlash P0	arcmin	1	3-20	-	≦3	≦2	≦2	≦2	≦2
		2	15-200	-	≦5	≦4	≦4	≦4	≦4
精密背隙 Precision Backlash P1	arcmin	1	3-20	≦5	≦5	≦4	≦4	≦4	≦4
		2	15-200	≦7	≦7	≦7	≦7	≦7	≦7
標準背隙 Standard Backlash P2	arcmin	1	3-20	≦7	≦7	≦6	≦6	≦6	≦6
		2	15-200	≦9	≦9	≦9	≦9	≦9	≦9
扭轉剛性Torsional Rigidity	N • m /arcmin	1,2	3-200	7	14	25	50	150	220
容許徑向力 F_{2rB} [1] Max. Radial Load	N	1,2	3-200	4130	5220	10650	17600	22000	27800
容許軸向力 F_{2aB} [1] Max. Axial Load	N	1,2	3-200	2500	3300	5700	11300	14000	16200
使用溫度 Operating Temp.	°C		3-200	-10 °C ~+90 °C					
使用壽命Service Life	hr		3-200	30,000 (15,000/ 連續運轉 Continuous operation)					
效率 Efficiency	%	1	3-20	≧95%					
		2	15-200	≧92%					
重量 Weight	kg	1	3-20	3.1	5.5	12.5	25.5	46	75
		2	15-200	3.7(3.3)	4.9	13.6	27	50	88
安裝方向 Mounting Position	-	1,2	3-200	任意方向Any direction					
噪音值 Noise Level [2]	dBA/1m	1,2	3-200	64	66	68	70	72	74
防護等級 Protection Class	-	1,2	3-200	IP65					
潤滑 Lubrication	-	1,2	3-200	全合成潤滑油脂 Synthetic Lubricant					

減速機轉動慣量 Inertia(J1)

節數Stage	減速比Ratio	單位unit	PUR-60	PUR-75	PUR-100	PUR-140	PUR-180	PUR-220
1	3/4/5/7/9	Kg • cm^2	0.40	2.28	6.87	24.2	69.8	138.2
	6/8/10/14/20		0.30	1.45	4.76	14.5	50.3	103.6
節數Stage	減速比Ratio		PUR-60(T)	PUR-75T	PUR-100T	PUR-140T	PUR-180T	PUR-220T
2	15/20/25/35/45		0.40(0.08)	0.72	3.02	7.83	27.7	80.3
	others		0.30(0.06)	0.38	1.64	5.00	15.9	55.3

* 1. 輸出轉速 100rpm 時，作用於輸出軸中心位置。Applied to the output shaft center @100rpm.
* 2. 3000rpm 空載量測。Measured at 3000 rpm with no load. These values are measured by gearbox with ratio = 10 (1-stage) or ratio = 100 (2-stage) at nominal input speed or 3000 rpm (if nominal input speed is higher than 3000 rpm) with no load.

※本公司有權對以上數據規格逕行設計變更不先行告知。The above figures/specifications are subject to change without prior notice.

Products due to human error, natural disasters or other factors lead to poor or damaged, will not be covered under warranty.
產品因人為原因或天災等因素導致不良或損壞，不在保固範圍內。

PUL SERIES

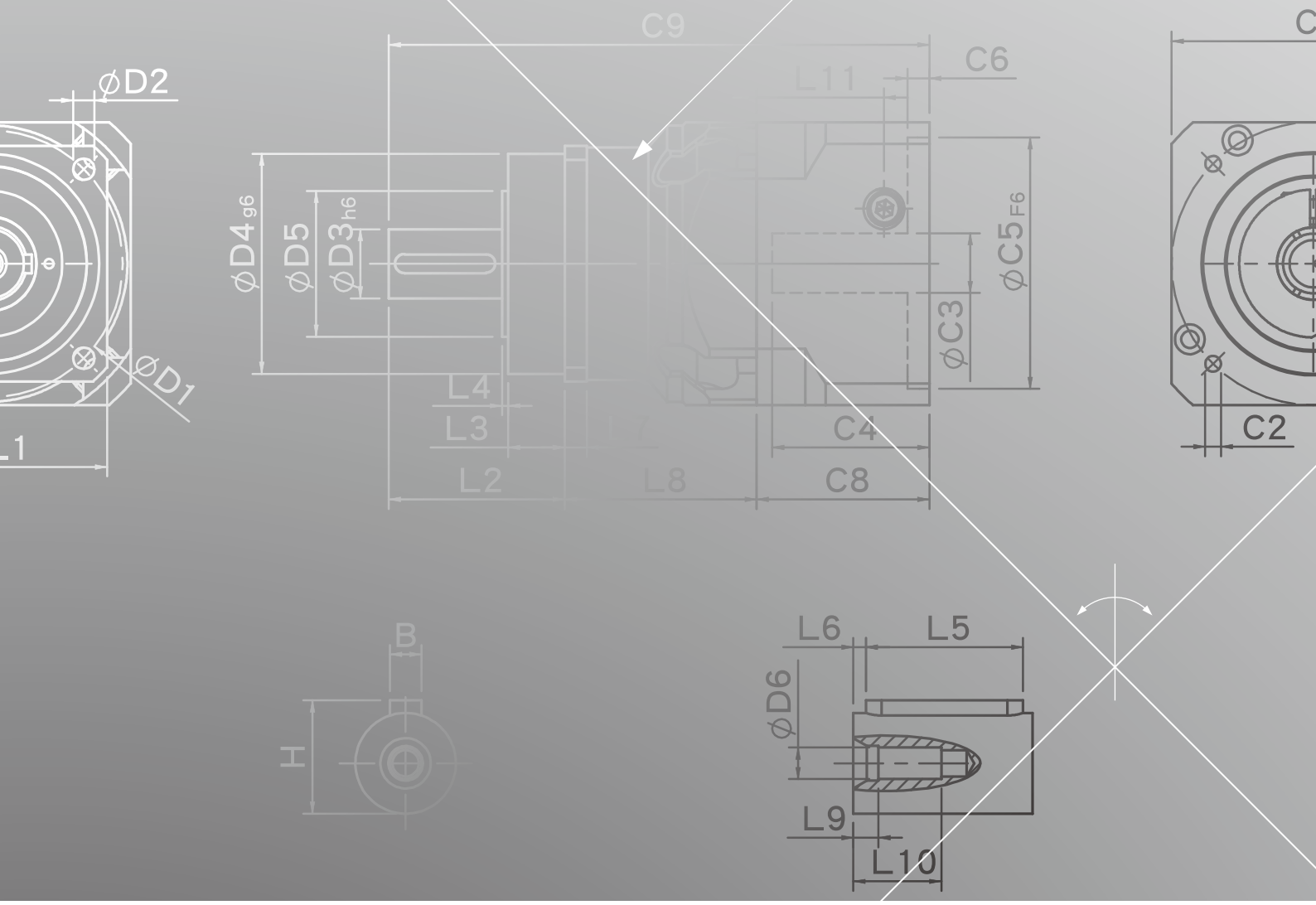
C9
C6
L11
ØD2
ØD4 g6
ØD5
ØD3 h6
ØC5 F6
ØC3
ØD1
L4
L3
L2
L8
C4
C8
C2
B
H
L6
L5
ØD6
L9
L10

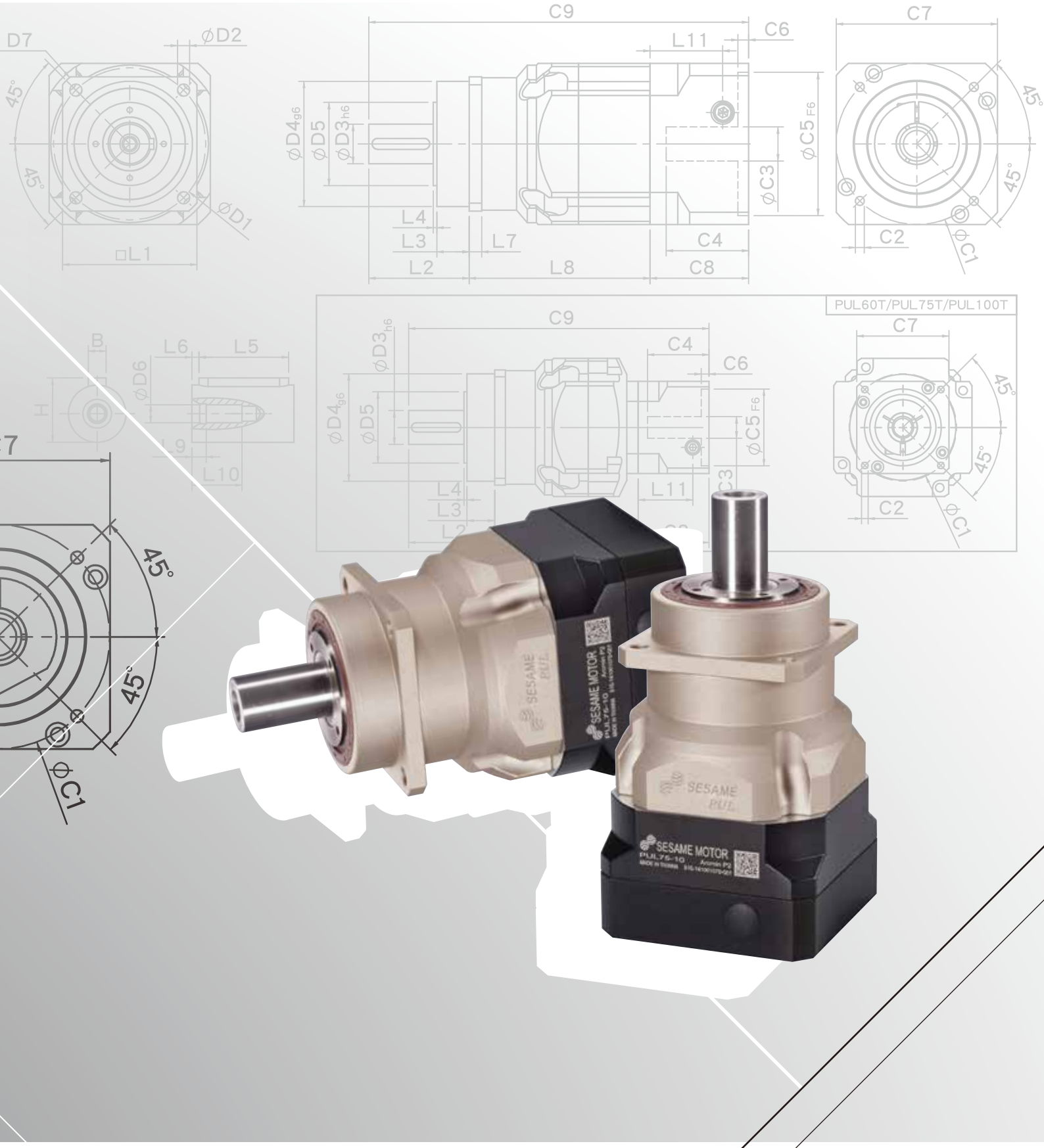
D7
ØD2
45°
45°
ØD1
□L1
C9
C6
L11
C7
ØD4g6
ØD5
ØD3h6
ØC5F6
ØC3
L4
L3
L7
L2
L8
C4
C8
C2
ØC1
PUL60T/PUL75T/PUL100T
B
L6
L5
ØD6
H
L9
L10
SESAME MOTOR
SESAME
PUL

PUL Single Stage Dimensions PUL單段外型尺寸圖

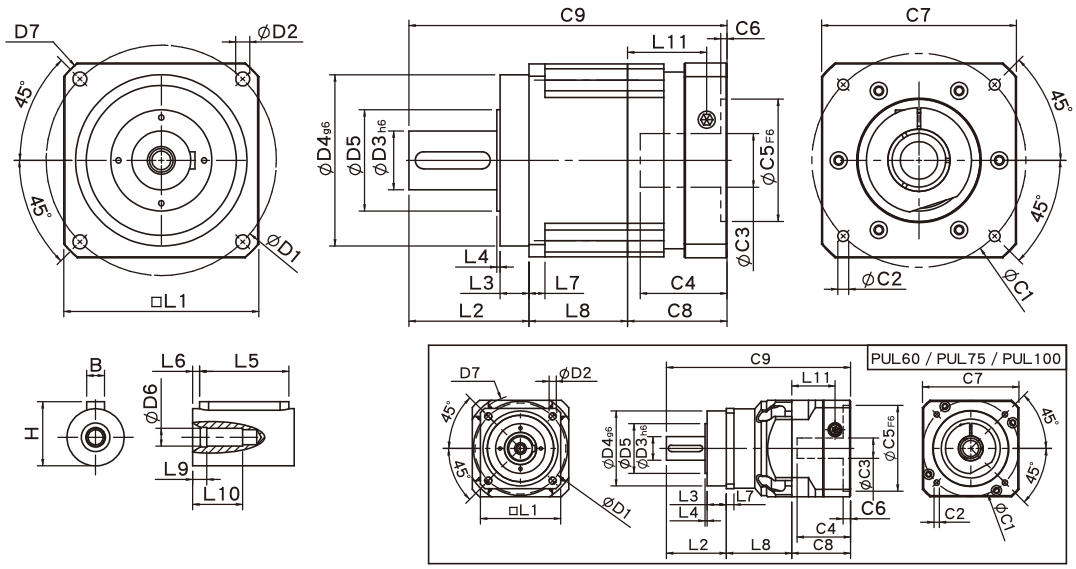

Specifications 規格

Unit:mm

尺寸 Dimensions	PUL60	PUL75	PUL100	PUL140	PUL180	PUL220
D1	68	85	120	165	215	250
D2	5.5	6.8	9	11	13	17
D3 h6	16	22	32	40	55	75
D4 g6	60	70	90	130	160	180
D5	34.6	46.4	59.6	79.2	94.5	114.4
D6	M5x0.8P	M8x1.25P	M12x1.75P	M16x2.0P	M20x2.5P	M20x2.5P
D7	80	100	138	186	239	292
L1	62	76	105	142	180	220
L2	48.5	56	88	112	112	138
L3	18.5	18	28	27	27	30
L4	1.5	2	2	3	3	3
L5	25	32	40	60	70	90
L6	2	2	5	5	6	7
L7	6	7	10	12	15	20
L8	44	61	46	64.5	92	111
L9	4	4.5	6	6	8	15
L10	16.5	20.5	30	38	48	42
L11	35.5	40.5	41.8	70	74	96
C1 [2]	70	90	115	165	200	235
C2 [2]	M5x0.8P	M6x1P	M8x1.25P	M10x1.5P	M12x1.75P	M12x1.75P
C3 [2]	≦14/≦19	≦19/≦24	≦24/≦32/≦38	≦35/≦38	≦50	≦55
C4 [2]	37	47	51	66.7	81	112
C5 [2] F6	50	70	95	130	114.3	200
C6 [2]	4	6	6	5.5	6	6
C7 [2]	60	90	115	140	182	220
C8 [2]	46	55	58	87.2	93	120
C9 [2]	138.5	172	192	263.7	297	369
B	5	6	10	12	16	20
H	18	24.5	35	43	59	79.5

★ C1~C9是公製標準馬達連接板尺寸,請依所選用的馬達決定.

★ 本公司有權針對以上數據規格逕行設計變更不先行告知.

★ C1~C9 are motor specific dimensions(metric std shown), Size may vary according to the motor flange chosen.

★ Specification subject to change without notice.

PUL Double Stage Dimensions-1 PUL雙段外型尺寸圖-1

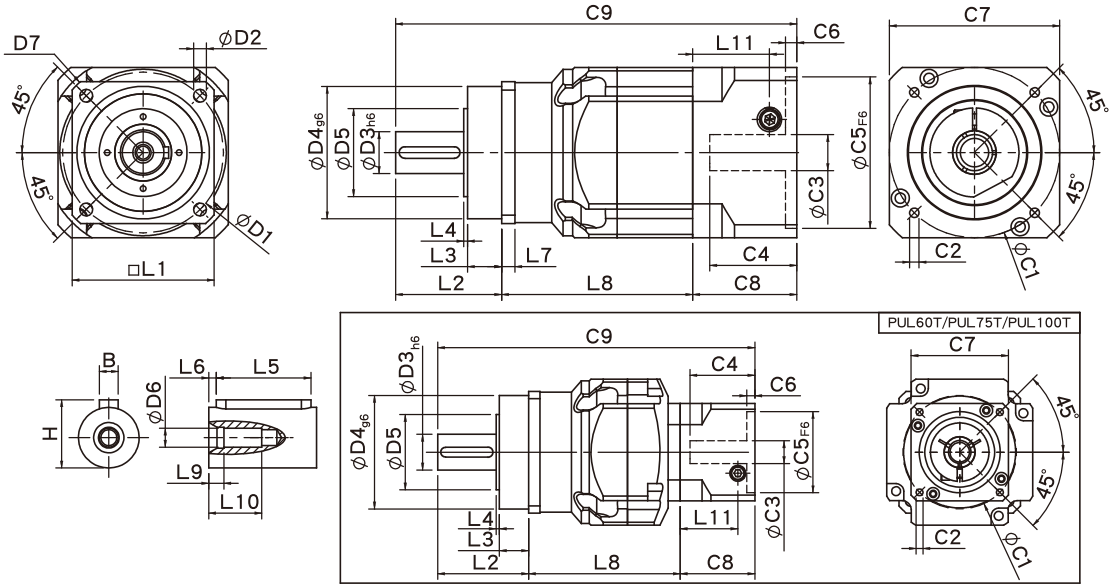

Specifications 規格

Unit:mm

尺寸 Dimensions	PUL60/PUL60T		PUL75/PUL75T		PUL100T
D1	68		85		120
D2	5.5		6.8		9
D3 h6	16		22		32
D4 g6	60		70		90
D5	34.6		46.4		59.6
D6	M5x0.8P		M8x1.25P		M12x1.75P
D7	80		100		138
L1	62		76		105
L2	48.5		56		88
L3	18.5		18		28
L4	1.5		2		2
L5	25		32		40
L6	2		2		5
L7	6		7		10
L8	77	72.5	101	93.5	88.5
L9	4		4.5		6
L10	16.5		20.5		30
L11	35.5	29	40.5	35.5	40.5
C1 [2]	70	46	90	70	90
C2 [2]	M5x0.8P	M4x0.7P	M6x1P	M5x0.8P	M6x1P
C3 [2]	≦14/≦19	≦8/≦11	≦19/≦24	≦14/≦19	≦19/≦24
C4 [2]	37	27	47	37	47
C5 [2] F6	50	30	70	50	70
C6 [2]	4	4	6	4	6
C7 [2]	60	42.6	90	60	90
C8 [2]	46	38.5	55	46	55
C9 [2]	171.5	159.5	212	195.5	231.5
B	5		6		10
H	18		24.5		35

★ C1~C9是公製標準馬達連接板尺寸,請依所選用的馬達決定.

★ 本公司有權針對以上數據規格逕行設計變更不先行告知.

★ C1~C9 are motor specific dimensions(metric std shown), Size may vary according to the motor flange chosen.

★ Specification subject to change without notice.

PUL Double Stage Dimensions-2 PUL雙段外型尺寸圖-2

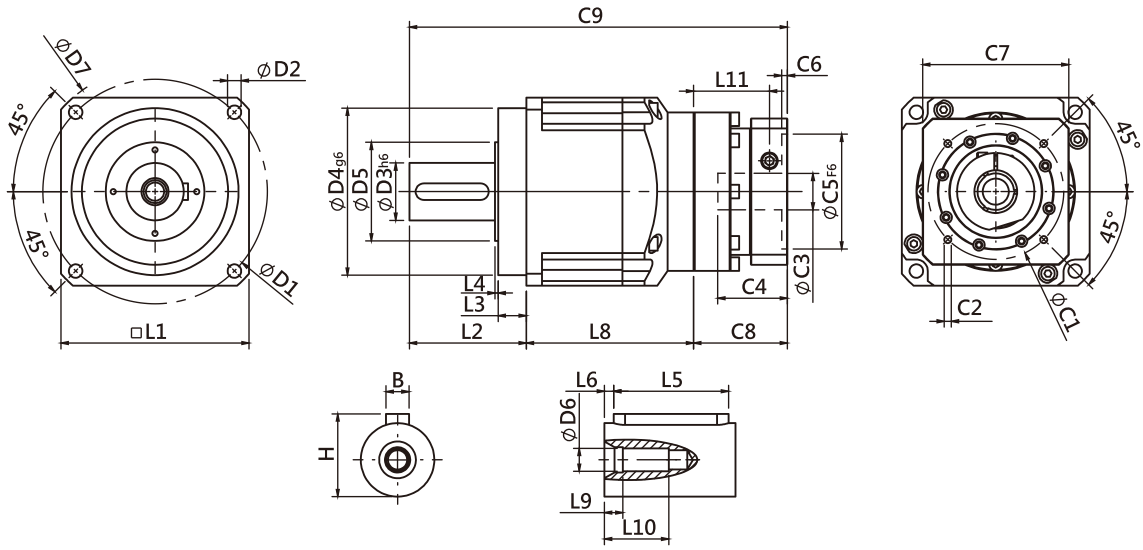

Specifications 規格

Unit:mm

尺寸 Dimensions	PUL140T	PUL180T	PUL220T
D1	165	215	250
D2	11	13	17
D3 h6	40	55	75
D4 g6	130	160	180
D5	79.2	94.5	114.4
D6	M16x2.0P	M20x2.5P	M20x2.5P
D7	186	239	292
L1	142	180	220
L2	112	112	138
L3	27	27	30
L4	3	3	3
L5	60	70	90
L6	5	6	7
L7	12	15	20
L8	120	160.2	202
L9	6	8	15
L10	38	48	42
L11	41.8	72.6	74
C1 [2]	130	130	200
C2 [2]	M8x1.25P	M8x1.25P	M12x1.75P
C3 [2]	≦24/≦32/≦38	≦35/≦38	≦50
C4 [2]	51	66.7	81
C5 [2] F6	110	110	114.3
C6 [2]	6	5.5	6
C7 [2]	115	140	180
C8 [2]	58	89.8	93
C9 [2]	290	362	433
B	12	16	20
H	43	59	79.5

★ C1~C9是公製標準馬達連接板尺寸,請依所選用的馬達決定.

★ 本公司有權針對以上數據規格逕行設計變更不先行告知.

★ C1~C9 are motor specific dimensions(metric std shown), Size may vary according to the motor flange chosen.

★ Specification subject to change without notice.

PUL Specifications Table PUL性能規格共表

規格 Specifications		節數 Stage	減速比 Ratio	PUL-60	PUL-75	PUL-100	PUL-140	PUL-180	PUL-220
額定輸出力矩 T_{2N} Nominal Output Torque	N • m	1	3	53	145	180	340	580	1100
			4	55	150	240	500	1100	1700
			5	54	140	290	600	1200	2000
			6	46	135	280	560	1100	1850
			7	44	125	270	530	1100	1750
			8	41	110	240	480	1000	1550
			9	37	95	220	430	900	1500
			10	37	95	220	430	900	1450
		節數 Stage	減速比 Ratio	PUL-60 (T)	PUL-75(T)	PUL-100T	PUL-140T	PUL-180T	PUL-220T
		2	15	53	145	180	520	1200	2000
			20	55	150	240	600	1200	2000
			25	54	140	290	600	1200	2000
			30	54	140	290	600	1200	2000
			35	54	140	290	600	1200	2000
			40	54	140	290	600	1200	2000
			45	54	140	290	600	1200	2000
			50	54	140	290	600	1200	2000
			60	46	135	280	560	1200	1850
			70	44	125	270	530	1100	1750
			80	41	110	240	480	1000	1550
			90	37	95	220	430	900	1500
			100	37	95	220	430	900	1450
急停力矩 T_{2NOT} Emergency Stop Torque	N • m		3.0 倍額定輸出力矩 (3.0 times of Nominal Output Torque) (* 最大輸出力矩 Max. Output Torque T_{2B}=60% of Emergency Stop Torque)						
額定輸入轉速 n_{1N} Nominal Input Speed	rpm	1,2	3-100	5000	4000	4000	3000	3000	2000
最大輸入轉速 n_{1max} Max. Input Speed	rpm	1,2	3-100	10000	8000	8000	6000	6000	4000
超精密背隙 Micro Backlash P0	arcmin	1	3-10	≦2	≦2	≦1	≦1	≦1	≦1
		2	12-100	≦4	≦4	≦3	≦3	≦3	≦3
精密背隙 Precision Backlash P1	arcmin	1	3-10	≦4	≦4	≦3	≦3	≦3	≦3
		2	12-100	≦6	≦6	≦5	≦5	≦5	≦5
標準背隙 Standard Backlash P2	arcmin	1	3-10	≦6	≦6	≦5	≦5	≦5	≦5
		2	12-100	≦8	≦8	≦7	≦7	≦7	≦7
扭轉剛性Torsional Rigidity	N • m /arcmin	1,2	3-100	7	14	25	50	150	220
容許徑向力 F_{2rB} [1] Max. Radial Load	N	1,2	3-100	4130	5220	10650	17600	22000	27800
容許軸向力 F_{2aB} [1] Max. Axial Load	N	1,2	3-100	2500	3300	5700	11300	14000	16200
使用溫度 Operating Temp.	°C		3-100	-10 °C ~+90 °C					
使用壽命Service Life	hr		3-100	30,000 (15,000/ 連續運轉 Continuous operation)					
效率 Efficiency	%	1	3-10	≧97%					
		2	12-100	≧94%					
重量 Weight	kg	1	3-10	1.8	4.0	6.7	15.1	30.8	55
		2	12-100	2.4/2.0	5.7/4.5	8.2	17.5	37.0	68.5
安裝方向 Mounting Position	-	1,2	3-100	任意方向Any direction					
噪音值 Noise Level [2]	dBA/1m	1,2	3-100	58	60	63	65	67	70
防護等級 Protection Class	-	1,2	3-100	IP65					
潤滑 Lubrication	-	1,2	3-100	全合成潤滑油脂 Synthetic Lubricant					

減速機轉動慣量 Inertia(J1)

節數Stage	減速比Ratio	單位unit	PUL-60	PUL-75	PUL-100	PUL-140	PUL-180	PUL-220
1	3	Kg • cm²	0.23	0.97	2.35	10.00	30.50	79.50
	4		0.18	0.67	1.66	7.17	25.86	58.21
	5		0.17	0.65	1.50	6.52	23.63	54.36
	6/7/8		0.14	0.60	1.45	6.17	22.92	54.12
	9/10		0.14	0.58	1.41	6.10	22.73	53.98
節數Stage	減速比Ratio		PUL-60(T)	PUL-75(T)	PUL-100T	PUL-140T	PUL-180T	PUL-220T
2	15/20		0.17(0.02)	0.65(0.17)	0.65	1.50	6.52	30.50
	25/30/35/40		0.14(0.02)	0.60(0.14)	0.60	1.45	6.17	22.92
	45/50/60/70/80/90/100		0.14(0.02)	0.58(0.14)	0.58	1.41	6.10	22.73

1.輸出轉速100rpm 時，作用於輸出軸中心位置 Applied to the output shaft center @100rpm.
2.3000rpm 空載量測 Measured at 3000 rpm with no load. These values are measured by gearbox with ratio = 10 (1-stage) or ratio = 100 (2-stage) at nominal input speed or 3000 rpm (if nominal input speed is higher than 3000 rpm) with no load.
※本公司有權對以上數據規格逕行設計變更不先行告知。The above figures/specifications are subject to change without prior notice.

Products due to human error, natural disasters or other factors lead to poor or damaged, will not be covered under warranty.
產品因人為原因或天災等因素導致不良或損壞，不在保固範圍內。

PUA SERIES

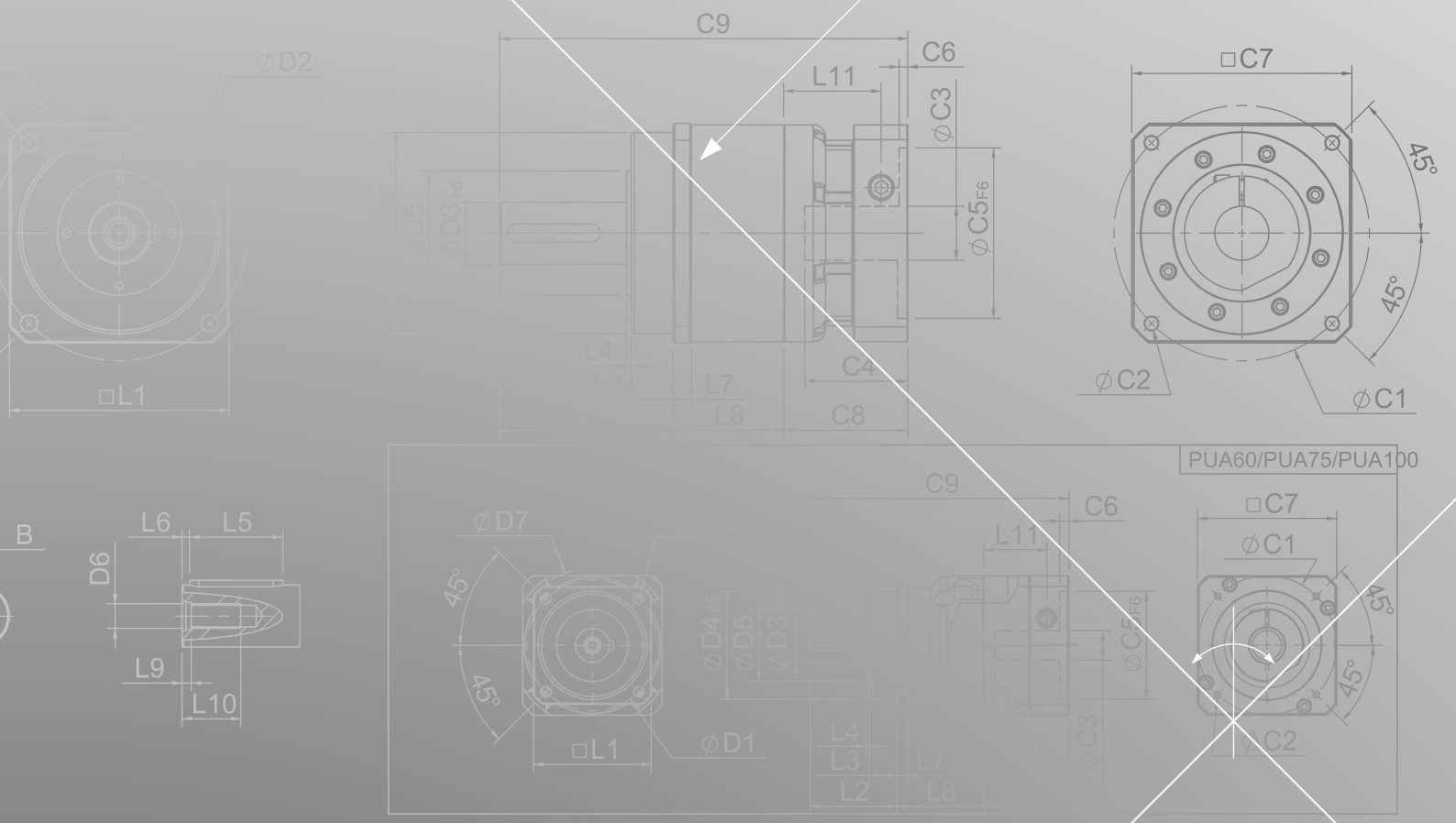
C9
C6
L11
ØC3
ØC5F6
ØD2
□L1
L4
L3
L7
L8
C4
C8
□C7
45°
45°
ØC2
ØC1
PUA60/PUA75/PUA100
B
L6
L5
D6
L9
L10
ØD7
45°
45°
□L1
ØD1
L2

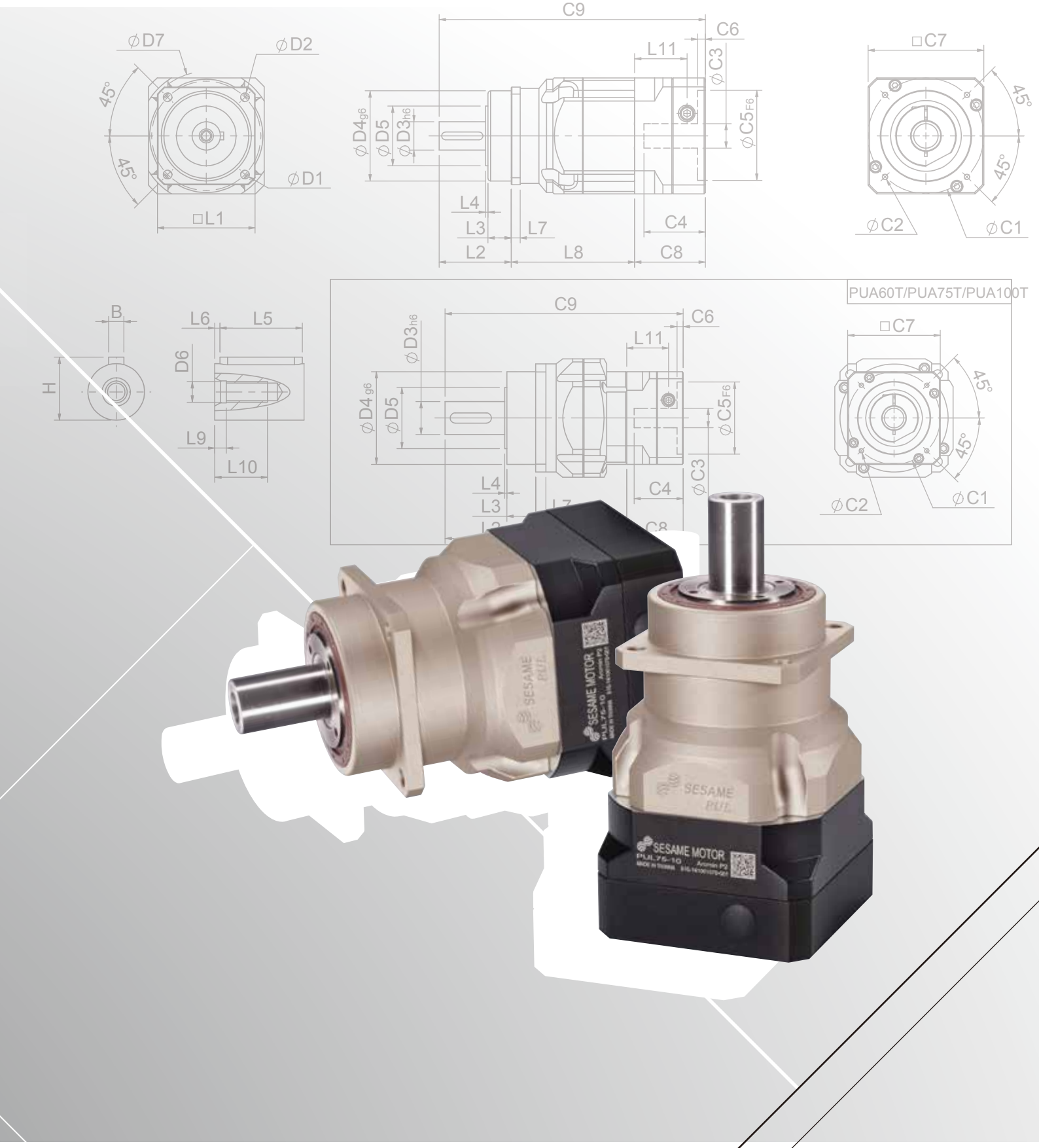
ϕD7
ϕD2
45°
45°
ϕD1
□L1
C9
C6
L11
ϕC3
ϕD4g6
ϕD5
ϕD3h6
ϕC5F6
L4
L3
L7
C4
L2
L8
C8
□C7
45°
45°
ϕC2
ϕC1
B
H
L6
L5
D6
L9
L10
PUA60T/PUA75T/PUA100T
C9
C6
L11
ϕD3h6
ϕD4g6
ϕD5
ϕC5F6
ϕC3
L4
L3
C4
C8
□C7
45°
45°
ϕC2
ϕC1
SESAME MOTOR
SESAME
PUL

PUA Single Stage Dimensions PUA單段外型尺寸圖

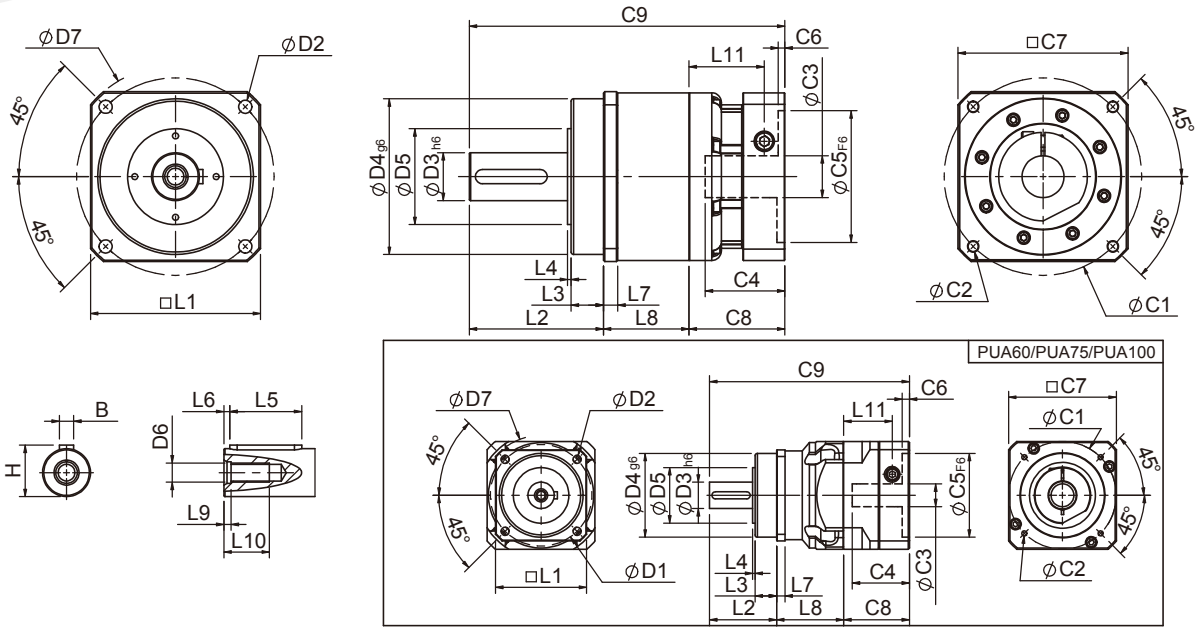

Specifications 規格

Unit:mm

尺寸 Dimensions	PUA60	PUA75	PUA100	PUA140
D1	68	85	120	165
D2	5.5	6.8	9	11
$D3_{h6}$	16	22	32	40
$D4_{g6}$	60	70	90	130
D5	34.4	46.4	59.6	79.2
D6	M5x0.8P	M8x1.25P	M12x1.75P	M16x2.0P
D7	80	100	138	186
L1	62	76	105	142
L2	48.5	56	88	112
L3	18.5	18	28	27
L4	1.5	2	2	3
L5	25	32	40	60
L6	2	2	5	5
L7	6	7	10	12
L8	32.5	56	46	71.5
L9	4	4.5	6	6
L10	16.5	20.5	30	38
L11	35.5	40.5	41.8	62.8
$C1^{2}$	70	90	115	165
$C2^{2}$	M5x0.8P	M6x1P	M8x1.25P	M10x1.5P
$C3^{2}$	≦14/≦19	≦19/≦24	≦24/≦32/≦38	≦35/≦38
$C4^{2}$	37	47.8	51	66.5
$C5^{2}{}_{F6}$	50	70	95	130
$C6^{2}$	4	6	6	5.5
$C7^{2}$	60	90	115	140
$C8^{2}$	46	55	58	80
$C9^{2}$	127	167	192	263.5
B	5	6	10	12
H	18	24.5	35	43

★ C1~C9是公製標準馬達連接板尺寸,請依所選用的馬達決定.

★ 本公司有權針對以上數據規格逕行設計變更不先行告知.

★ C1~C9 are motor specific dimensions(metric std shown), Size may vary according to the motor flange chosen.

★ Specification subject to change without notice.

PUA Double Stage Dimensions-1　PUA雙段外型尺寸圖-1

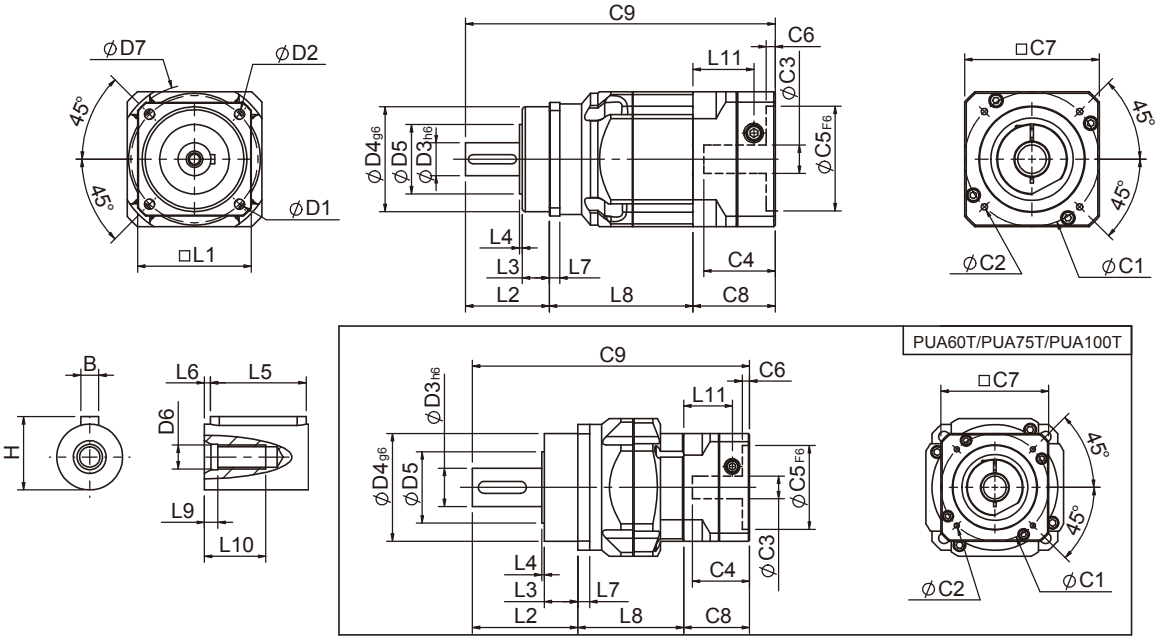

Specifications　規格

Unit:mm

尺寸 Dimensions	PUA60	PUA60T	PUA75	PUA75T	PUA100T
D1	68		85		120
D2	5.5		6.8		9
$D3_{h6}$	16		22		32
$D4_{g6}$	60		70		90
D5	34.4		46.4		59.6
D6	M5x0.8P		M8x1.25P		M12x1.75P
D7	80		100		138
L1	62		76		105
L2	48.5		56		88
L3	18.5		18		28
L4	1.5		2		2
L5	25		32		40
L6	2		2		5
L7	6		7		10
L8	65.5	61	96	88.5	88.5
L9	4		4.5		6
L10	16.5		20.5		30
L11	35.5	29	40.5	35.5	40.5
$C1^{2}$	70	46	90	70	90
$C2^{2}$	M5x0.8P	M4x0.7P	M6x1P	M5x0.8P	M6x1P
$C3^{2}$	≦14/≦19	≦8/≦14	≦19/≦24	≦14/≦19	≦19/≦24
$C4^{2}$	37	27	47.8	37	47.8
$C5^{2}{}_{F6}$	50	30	70	50	70
$C6^{2}$	4	4	6	4	6
$C7^{2}$	60	42.6	90	60	90
$C8^{2}$	46	38.5	55	46	55
$C9^{2}$	160	148	207	190.5	231.5
B	5		6		10
H	18		24.5		35

★ C1~C9是公製標準馬達連接板尺寸,請依所選用的馬達決定.
★ 本公司有權針對以上數據規格逕行設計變更不先行告知.

★ C1~C9 are motor specific dimensions(metric std shown), Size may vary according to the motor flange chosen.
★ Specification subject to change without notice.

PUA Double Stage Dimensions-2 PUA雙段外型尺寸圖-2

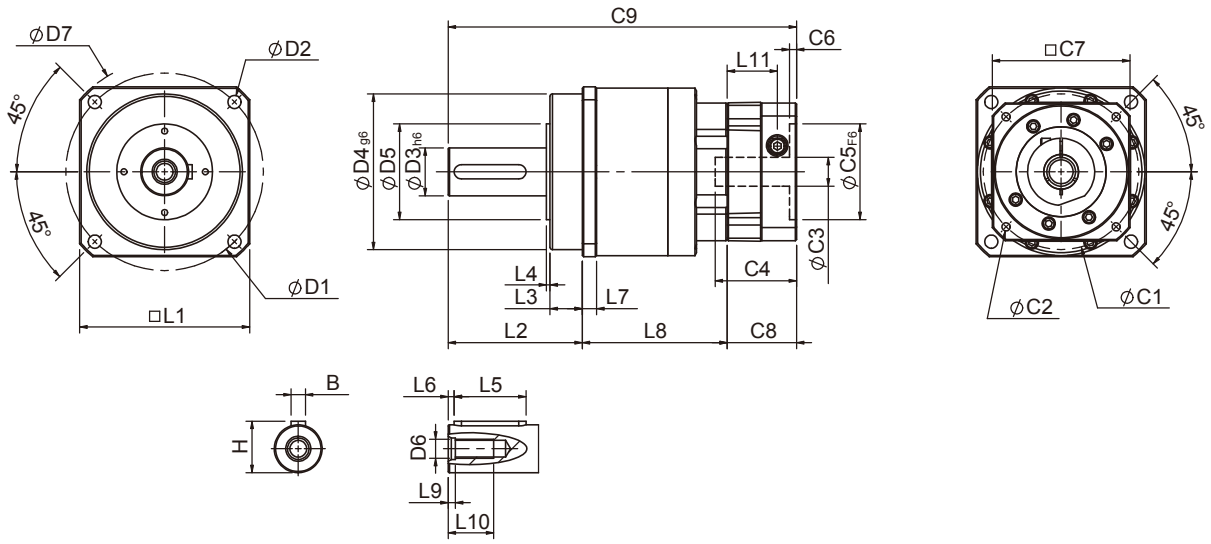

Specifications 規格

Unit:mm

尺寸 Dimensions	PUA140T	-	-
D1	165	-	-
D2	11	-	-
$D3_{h6}$	40	-	-
$D4_{g6}$	130	-	-
D5	79.2	-	-
D6	M16x2.0P	-	-
D7	186	-	-
L1	142	-	-
L2	112	-	-
L3	27	-	-
L4	3	-	-
L5	60	-	-
L6	5	-	-
L7	12	-	-
L8	121	-	-
L9	6	-	-
L10	38	-	-
L11	41.8	-	-
$C1^{2}$	130	-	-
$C2^{2}$	M8x1.25P	-	-
$C3^{2}$	≦24/≦32/≦38	-	-
$C4^{2}$	51	-	-
$C5^{2}{}_{F6}$	110	-	-
$C6^{2}$	6	-	-
$C7^{2}$	115	-	-
$C8^{2}$	58	-	-
$C9^{2}$	291	-	-
B	12	-	-
H	43	-	-

★ C1~C9是公製標準馬達連接板尺寸,請依所選用的馬達決定.

★ 本公司有權針對以上數據規格逕行設計變更不先行告知.

★ C1~C9 are motor specific dimensions(metric std shown), Size may vary according to the motor flange chosen.

★ Specification subject to change without notice.

PUA Specifications Table PUA性能規格共表

規格 Specifications		節數 Stage	減速比 Ratio	PUA60	PUA-75	PUA-100	PUA-140
額定輸出力矩 T_{2N} Nominal Output Torque	N · m	1	3	53	145	180	340
			4	55	150	240	500
			5	54	140	290	600
			6	46	135	280	560
			7	44	125	270	530
			8	41	110	240	480
			9	37	95	220	430
			10	37	95	220	430
		節數 Stage	減速比 Ratio	PUA-60 / PUA-60T	PUA-75 / PUA-75T	PUA-100T	PUA-140T
		2	15	53	145	180	520
			20	55	150	240	600
			25	54	140	290	600
			30	54	140	290	600
			35	54	140	290	600
			40	54	140	290	600
			45	54	140	290	600
			50	54	140	290	600
			60	46	135	280	560
			70	44	125	270	530
			80	41	110	240	480
			90	37	95	220	430
			100	37	95	220	430
急停力矩 T_{2NOT} Emergency Stop Torque	N · m	3.0倍額定輸出力矩 (3.0 times of Nominal Output Torque) (* 最大輸出力矩 Max. Output Torque T_{2B} =60% of Emergency Stop Torque)					
額定輸入轉速 n_{1N} Nominal Input Speed	rpm	1,2	3-100	4000	3500	3000	2500
最大輸入轉速 n_{1max} Max. Input Speed	rpm	1,2	3-100	6000	6000	5000	4500
超精密背隙 Micro Backlash P0	arcmin	1	3-10	≦ 2	≦ 2	≦ 1	≦ 1
		2	12-100	≦ 4	≦ 4	≦ 3	≦ 3
精密背隙 Precision Backlash P1	arcmin	1	3-10	≦ 4	≦ 4	≦ 3	≦ 3
		2	12-100	≦ 6	≦ 6	≦ 5	≦ 5
標準背隙 Standard Backlash P2	arcmin	1	3-10	≦ 6	≦ 6	≦ 5	≦ 5
		2	12-100	≦ 8	≦ 8	≦ 7	≦ 7
扭轉剛性 Torsional Rigidity	N · m /arcmin	1,2	3-100	7	14	25	50
容許徑向力 F_{2rB}[1] Max. Radial Load	N	1,2	3-100	1900	5000	7410	11380
容許軸向力 F_{2aB}[1] Max. Axial Load	N	1,2	3-100	1500	3080	4500	8830
使用溫度 Operating Temp.	℃		3-100	-10℃ ~ +90℃			
使用壽命 Service Life	hr		3-100	30,000 (15,000/ 連續運轉 Continuous operation)			
效率 Efficiency	%	1	3-10	≧97%			
		2	12-100	≧94%			
重量 Weight	kg	1	3-10	1.5	3.5	6.6	14.5
		2	12-100	2.0/1.7	5.2/4.0	8.1	17.5
安裝方向 Mounting Position	-	1,2	3-100	任意方向 Any Direction			
噪音值 Noise Level[2]	dBA/1m	1,2	3-100	58	60	63	65
防護等級 Protection Class	-	1,2	3-100	IP65			
潤滑 Lubrication	-	1,2	3-100	全合成潤滑油脂 Synthetic Lubricant			

減速機轉動慣量 Inertia (J1)

節數 Stage	減速比 Ratio	單位 unit	PUA60	PUA-75	PUA-100	PUA-140
1	3	Kg · cm^2	0.23	0.97	2.35	10.00
	4		0.18	0.67	1.66	7.17
	5		0.17	0.65	1.50	6.52
	6/7/8		0.14	0.60	1.45	6.17
	9/10		0.14	0.58	1.41	6.10
節數 Stage	減速比 Ratio		PUA-60(T)	PUA-75(T)	PUA-100T	PUA-140T
2	15/20		0.17(0.02)	0.65(0.17)	0.65	2.35
	25/30/35/40		0.14(0.02)	0.60(0.14)	0.60	1.45
	45/50/60/70/80/90/100		0.14(0.02)	0.58(0.14)	0.58	1.41

1.輸出轉速100rpm 時，作用於輸出軸中心位置 Applied to the output shaft center @100rpm.
2.3000rpm 空載量測 Measured at 3000 rpm with no load. These values are measured by gearbox with ratio = 10 (1-stage) or ratio = 100 (2-stage) at nominal input speed or 3000 rpm (if nominal input speed is higher than 3000 rpm) with no load.
※本公司有權對以上數據規格逕行設計變更不先行告知。The above figures/specifications are subject to change without prior notice.

Products due to human error, natural disasters or other factors lead to poor or damaged, will not be covered under warranty.
產品因人為原因或天災等因素導致不良或損壞，不在保固範圍內。

PGLH SERIES

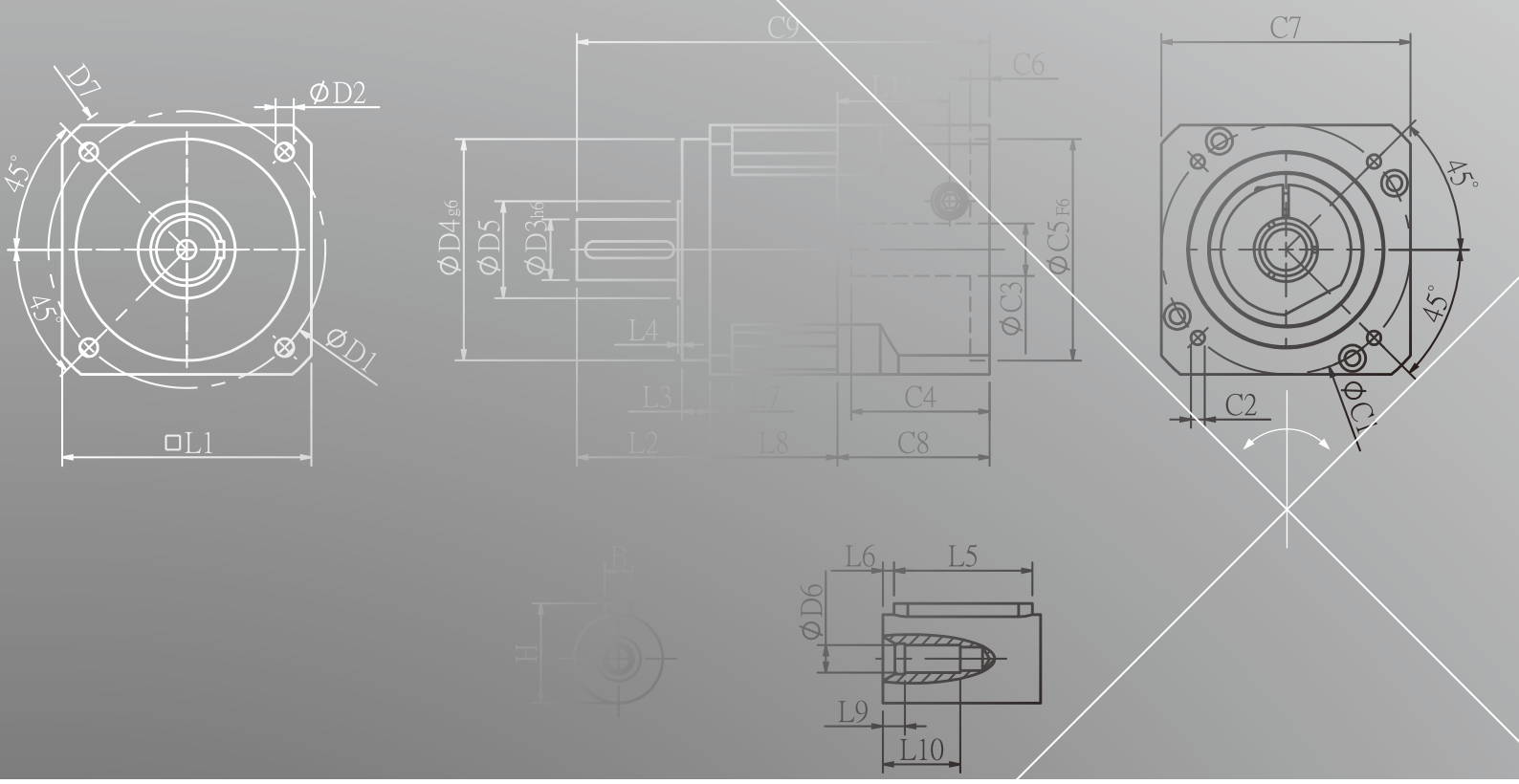
D7
ØD2
45°
45°
ØD1
□L1
C9
C6
L1
ØD4 g6
ØD5
ØD3 h6
ØC5 F6
ØC3
L4
L3
L7
C4
L2
L8
C8
C7
45°
45°
C2
ØC1
B
H
L6
L5
ØD6
L9
L10

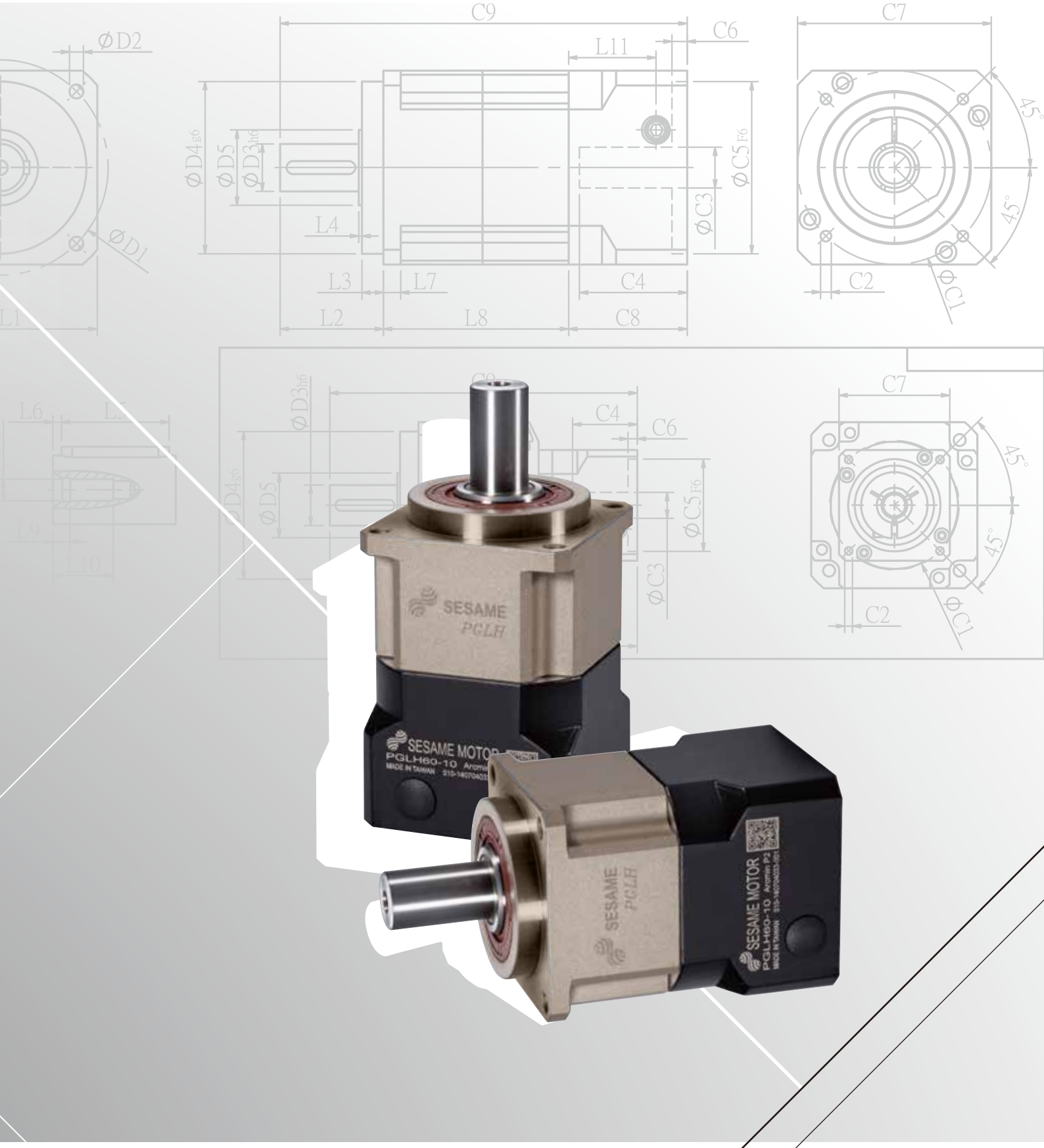
C9
C6
C7
L11
ØD2
ØD4g6
ØD5
ØD3h6
ØC5F6
ØC3
L4
ØD1
L3
L7
C4
L2
L8
C8
C2
ØC1
45°
45°
L1
L6
L9
L10
C9
ØD3h6
C4
C6
ØD4g6
ØD5
ØC5F6
ØC3
C7
45°
45°
C2
ØC1
SESAME
PGLH
SESAME MOTOR
PGLH60-10
MADE IN TAIWAN

PGLH Single Stage Dimensions PGLH單段外型尺寸圖

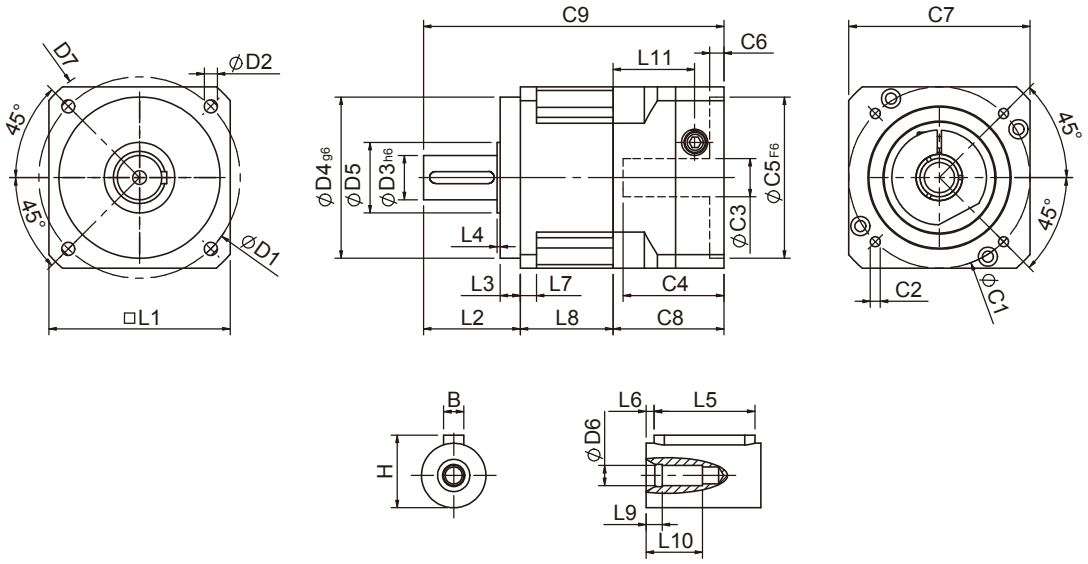

Specifications 規格

Unit:mm

尺寸 Dimensions	PGLH42	PGLH60	PGLH90	PGLH115	PGLH142	PGLH180
D1	50	70	100	130	165	215
D2	3.4	5.5	6.5	8.5	10.5	13
$D3_{h6}$	13	16	22	32	40	55
$D4_{g6}$	35	50	80	110	130	160
D5	15	25	35	45	50	70
D6	M4x0.7P	M5x0.8P	M8x1.25P	M12x1.75P	M16x2.0P	M20x2.5P
D7	56	80	118	148	186	239
L1	42.6	60	90	115	142	182
L2	26	37	48	63	91.5	100.5
L3	5.5	7	10	10	10	16
L4	1	1.5	1.5	3.5	2.5	2.5
L5	15	25	32	40	60	70
L6	2	2	3	5	5	6
L7	4	6	8	11	16	20
L8	28.3	37	46	57	75.5	94
L9	4	4	4.5	6	6	8
L10	14	16.5	20.5	30	38	48
L11	29	35.5	40.5	53.7	63	69.5
C1 [2]	46	70	90	115	145	200
C2 [2]	M4x0.7P	M5x0.8P	M6x1.0P	M8x1.25P	M8x1.25P	M12x1.75P
C3 [2]	≦8/≦14	≦14/≦19	≦19/≦24	≦24/≦32/≦38	≦35/≦38	≦50
C4 [2]	27	37	41	56.3	66.5	82
$C5^{2}{}_{F6}$	30	50	70	95	110	114.3
C6 [2]	4	4	6	10	5.5	13
C7 [2]	42.6	60	90	115	140	182
C8 [2]	38.5	46	55	75	80	95
C9 [2]	92.8	120	149	195	247	289.5
B	5	5	6	10	12	16
H	15	18	24.5	35	43	59

★ C1~C9是公製標準馬達連接板尺寸,請依所選用的馬達決定.

★ 本公司有權針對以上數據規格逕行設計變更不先行告知.

★ C1~C9 are motor specific dimensions(metric std shown), Size may vary according to motor flange.

★ Specification subject to change without notice.

PGLH Double Stage Dimensions PGLH雙段外型尺寸圖

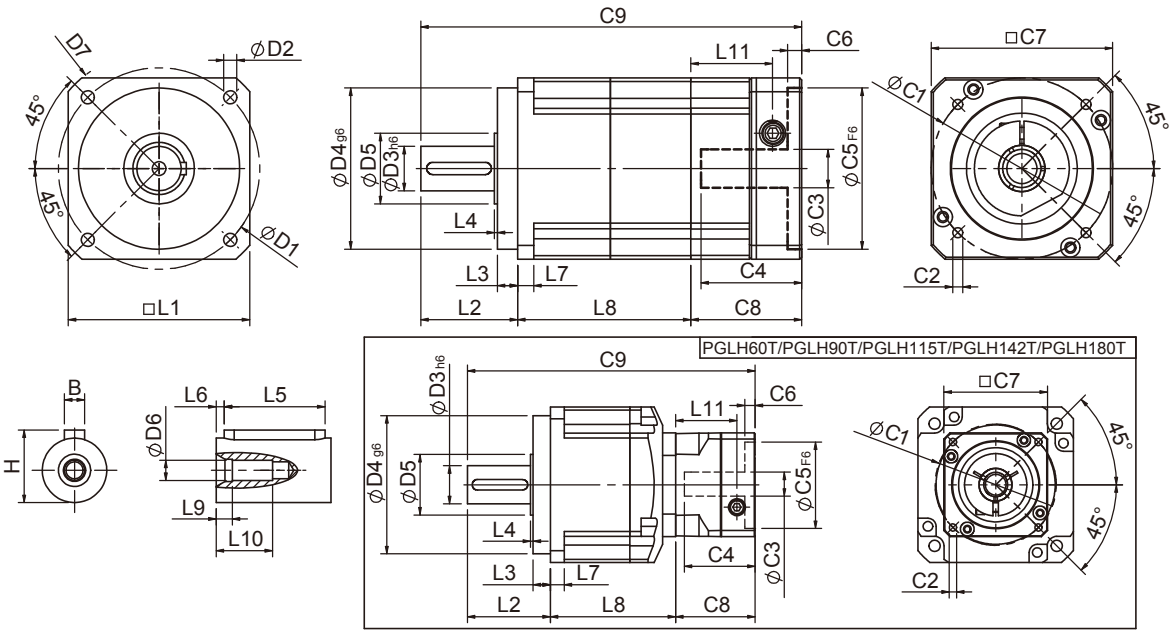

Specifications 規格

Unit:mm

尺寸 Dimensions	PGLH42	PGLH60	PGLH60T	PGLH90	PGLH90T	PGLH115T	PGLH142T	PGLH180T
D1	50	70		100		130	165	215
D2	3.4	5.5		6.5		8.5	10.5	13
$D3_{h6}$	13	16		22		32	40	55
$D4_{g6}$	35	50		80		110	130	160
D5	15	25		35		45	50	70
D6	M4x0.7P	M5x0.8P		M8x1.25P		M12x1.75P	M16x2.0P	M20x2.5P
D7	56	80		118		148	186	239
L1	42.6	60		90		115	142	182
L2	26	37		48		63	91.5	100.5
L3	5.5	7		10		10	10	16
L4	1	1.5		1.5		3.5	2.5	2.5
L5	15	25		32		40	60	70
L6	2	2		3		5	5	6
L7	4	6		8		11	16	20
L8	55.3	70	65.5	90	78.5	99.5	127.5	166
L9	4	4		4.5		6	6	8
L10	14	16.5		20.5		30	38	48
L11	29	35.5	29	40.5	35.5	40.5	41.8	62.8
$C1^{2}$	46	70	46	90	70	90	115	145
$C2^{2}$	M4x0.7P	M5x0.8P	M4x0.7P	M6x1.0P	M5x0.8P	M6x1.0P	M8x1.25P	M8x1.25P
$C3^{2}$	≦8/≦14	≦14/≦19	≦8/≦14	≦19/≦24	≦14/≦19	≦19/≦24	≦24/≦32/≦38	≦35/≦38
$C4^{2}$	27	37	27	41	37	41	56	66.5
$C5^{2}{}_{F6}$	30	50	30	70	50	70	95	110
$C6^{2}$	4	4	4	6	4	6	10	5.5
$C7^{2}$	42.6	60	42.6	90	60	90	115	140
$C8^{2}$	38.5	46	38.5	55	46	55	63	80
$C9^{2}$	119.8	153	141	193	172.5	217.5	282	346.5
B	5	5		6		10	12	16
H	15	18		24.5		35	43	59

★ C1~C9是公製標準馬達連接板尺寸,請依所選用的馬達決定.

★ 本公司有權針對以上數據規格逕行設計變更不先行告知.

★ C1~C9 are motor specific dimensions(metric std shown), Size may vary according to motor flange.

★ Specification subject to change without notice.

PGLH Specifications Table PGLH性能規格共表

規格Specifications		節數 Stage	減速比 Ratio	PGLH-42	PGLH-60	PGLH-90	PGLH-115	PGLH-142	PGLH-180	PGLH-220
額定輸出力矩 T_{2N} Nominal Output Torque	N · m	1	3	19	53	145	290	520	950	-
			4	20	55	150	300	550	1000	-
			5	17	54	140	290	600	1050	-
			6	15	46	135	280	560	1000	-
			7	14	44	125	270	530	960	-
			8	12	41	110	240	480	900	-
			9	11	37	95	220	430	800	-
			10	11	37	95	220	430	800	-
		節數 Stage	減速比 Ratio	PGLH-42	PGLH-60 / PGLH-60T	PGLH-90 / PGLH-90T	PGLH-115T	PGLH-142T	PGLH-180T	PGLH-220T
		2	15	19	53	145	290	520	950	-
			20	20	55	150	300	550	1000	-
			25	17	54	140	290	600	1050	-
			30	17	54	140	290	600	1050	-
			35	17	54	140	290	600	1050	-
			40	17	54	140	290	600	1050	-
			45	17	54	140	290	600	1050	-
			50	17	54	140	290	600	1050	-
			60	15	46	135	280	560	1000	-
			70	14	44	125	270	530	960	-
			80	12	41	110	240	480	900	-
			90	11	37	95	220	430	800	-
			100	11	37	95	220	430	800	-
急停力矩 T_{2NOT} Emergency Stop Torque	N · m		3.0倍額定輸出力矩 (3.0 times of Nominal Output Torque) (* 最大輸出力矩 Max. Output Torque T_{2B} =60% of Emergency Stop Torque)							
額定輸入轉速 n_{1N} Nominal Input Speed	rpm	1,2	3-100	4000	4000	3000	3000	2500	2500	2000
最大輸入轉速 n_{1max} Max. Input Speed	rpm	1,2	3-100	8000	8000	6000	6000	5000	4000	4000
超精密背隙 Micro Backlash P0	arcmin	1	3-10	≦4	≦4	≦4	≦3	≦3	≦3	≦3
		2	12-100	≦6	≦6	≦6	≦5	≦5	≦5	≦5
精密背隙 Precision Backlash P1	arcmin	1	3-10	≦6	≦6	≦6	≦5	≦5	≦5	≦5
		2	12-100	≦8	≦8	≦8	≦7	≦7	≦7	≦7
標準背隙 Standard Backlash P2	arcmin	1	3-10	≦8	≦8	≦8	≦7	≦7	≦7	≦7
		2	12-100	≦10	≦10	≦10	≦9	≦9	≦9	≦9
扭轉剛性 Torsional Rigidity	N · m /arcmin	1,2	3-100	2.5	6	12	23	50	145	-
容許徑向力 F_{2rB}[1] Max. Radial Load	N	1,2	3-100	640	1260	2230	4300	7140	11050	-
容許軸向力 F_{2aB}[1] Max. Axial Load	N	1,2	3-100	410	600	1500	3310	4670	6460	-
使用溫度 Operating Temp.	℃		3-100	-10℃~+90℃						
使用壽命 Service Life	hr		3-100	20,000 (10,000/連續運轉Continuous operation)						
效率 Efficiency	%	1	3-10	≧97%						
		2	12-100	≧94%						
重量 Weight	kg	1	3-10	0.6	1.3	3.5	7.8	16.1	27	-
		2	12-100	0.9	2.0/1.6	5.6/3.9	9.5	19	34	-
安裝方向 Mounting Position	-	1,2	3-100	任意方向 Any direction						
噪音值 Noise Level [2]	dBA/1m	1,2	3-100	58	60	63	65	67	68	-
防護等級 Protection Class	-	1,2	3-100	IP65						
潤滑 Lubrication	-	1,2	3-100	全合成潤滑油脂 Synthetic Lubricant						

減速機轉動慣量 Inertia(J1)

節數 Stage	減速比 Ratio	單位 unit	PGLH-42	PGLH-60	PGLH-90	PGLH-115	PGLH-142	PGLH-180	PGLH-220
1	3	Kg · cm^2	0.03	0.23	0.97	2.35	10.00	30.50	-
	4		0.02	0.18	0.67	1.66	7.17	25.86	-
	5		0.02	0.17	0.65	1.50	6.52	23.63	-
	6/7/8		0.02	0.14	0.60	1.45	6.17	22.92	-
	9/10		0.02	0.14	0.58	1.41	6.10	22.73	-
節數 Stage	減速比 Ratio		PGLH-42	PGLH-60(T)	PGLH-90(T)	PGLH-115T	PGLH-142T	PGLH-180T	PGLH-220T
2	15/20/25		0.02	0.17(0.02)	0.65(0.17)	0.65	1.50	6.52	23.63
	30/35/40		0.02	0.14(0.02)	0.60(0.14)	0.60	1.45	6.17	22.92
	45/50/60/70/80/90/100		0.02	0.14(0.02)	0.58(0.14)	0.58	1.41	6.10	22.73

* 1. 輸出轉速 100rpm 時，作用於輸出軸中心位置。Applied to the output shaft center @100rpm.
* 2. 3000rpm 空載量測。Measured at 3000 rpm with no load. These values are measured by gearbox with ratio = 10 (1-stage) or ratio = 100 (2-stage) at nominal input speed or 3000 rpm (if nominal input speed is higher than 3000 rpm) with no load.

※本公司有權對以上數據規格逕行設計變更不先行告知。The above figures/specifications are subject to change without prior notice.

Products due to human error, natural disasters or other factors lead to poor or damaged, will not be covered under warranty.
產品因人為原因或天災等因素導致不良或損壞，不在保固範圍內。


SESAME MOTOR
SESAME MOTOR

PGCH SERIES

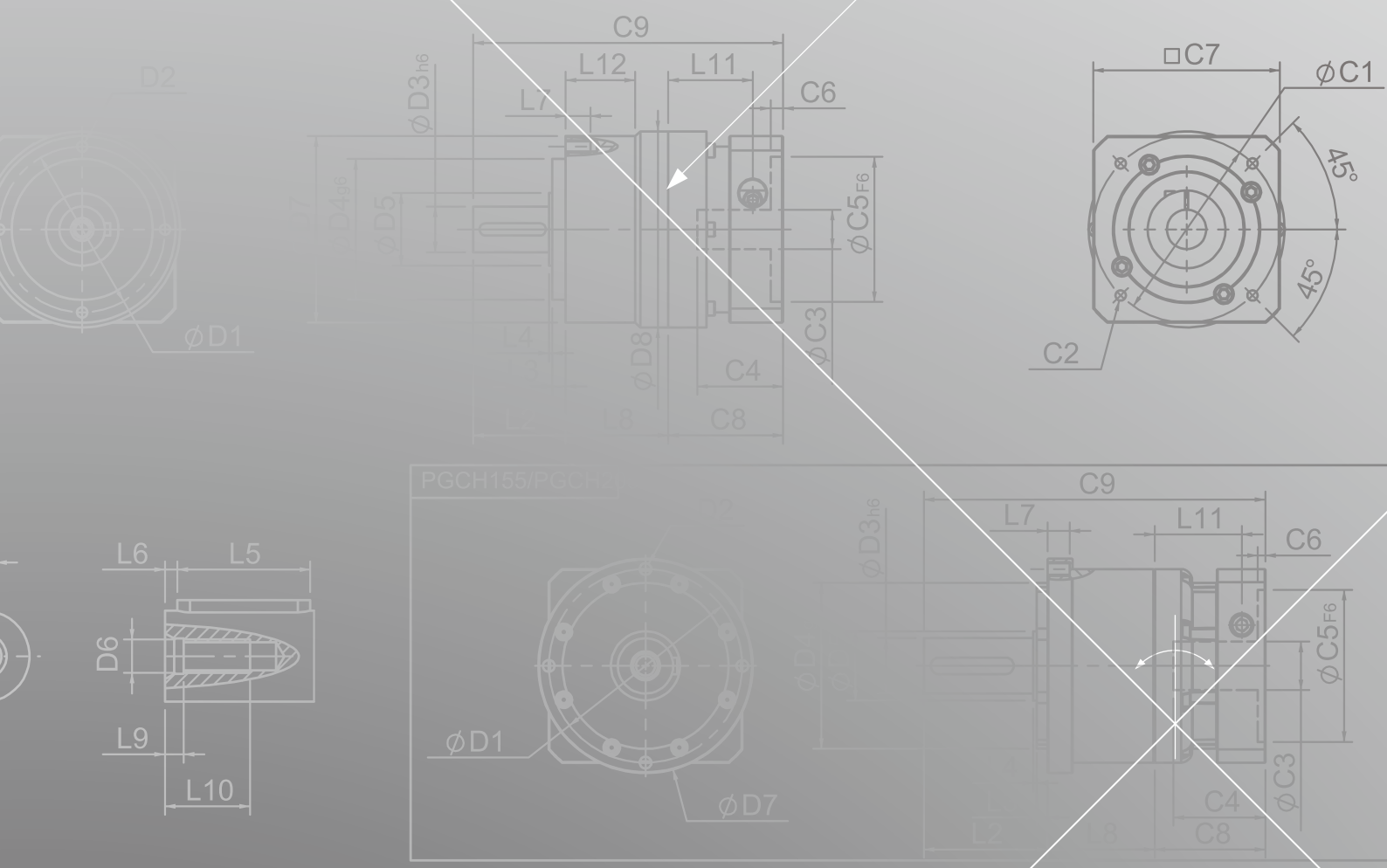
C9
L12
L11
L7
C6
D2
ØD3h6
ØD4g6
ØD5
ØC5F6
ØC3
ØD8
L4
L3
C4
L2
L8
C8
ØD1
□C7
ØC1
45°
45°
C2
L6
L5
D6
L9
L10
PGCH155/PGCH2
C2
ØD1
ØD7
ØD3h6
ØD4
C9
L7
L11
C6
ØC5F6
ØC3
C4
L2
L8
C8

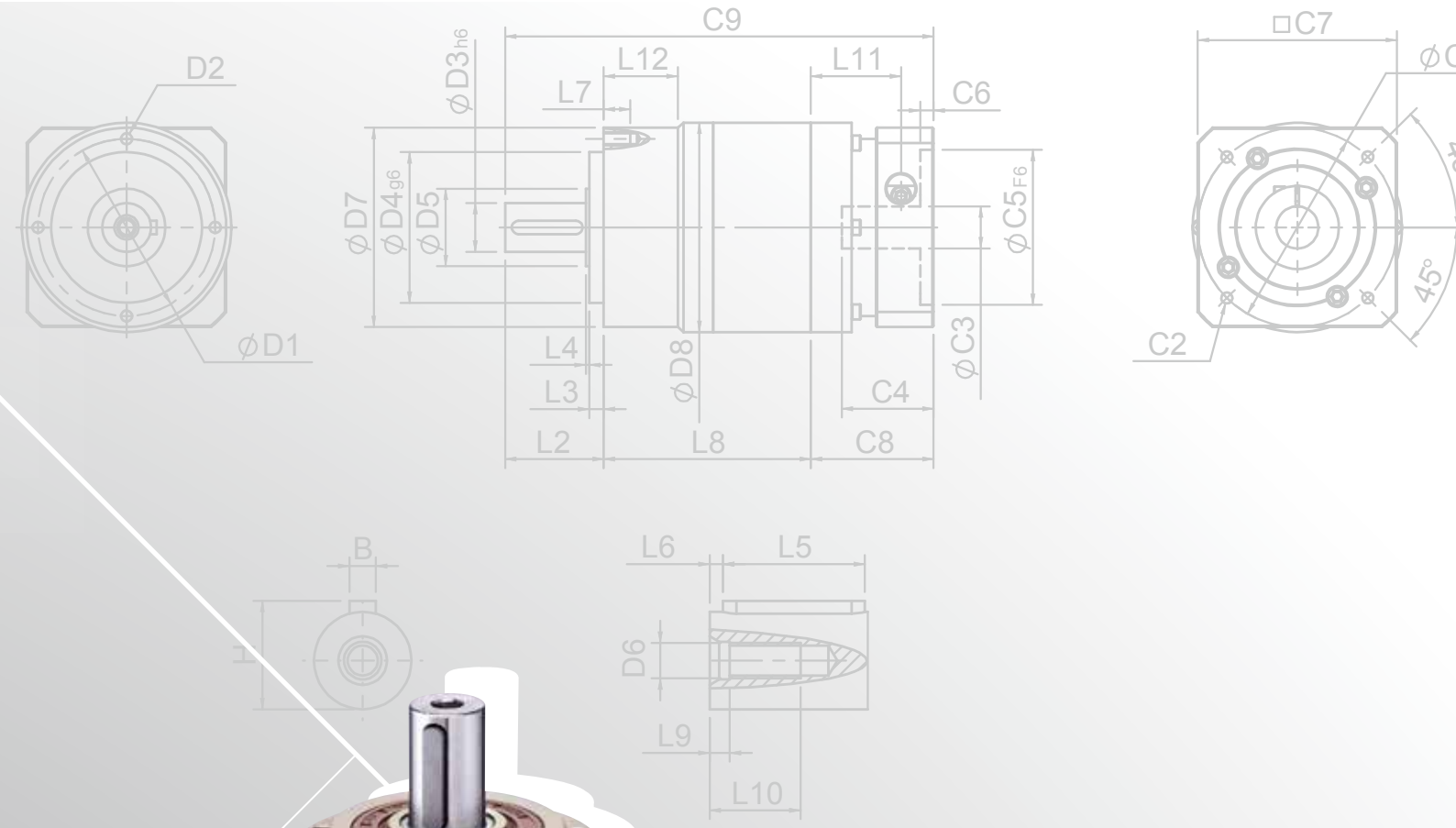
D2
ØD1
ØD3h6
C9
L12
L11
L7
C6
ØD7
ØD4g6
ØD5
ØC5F6
L4
L3
ØD8
ØC3
C4
L2
L8
C8
□C7
C2
45°
B
L6
L5
D6
L9
L10


SESAME
SESAME
SESAME

PGCH Single Stage Dimensions PGCH單段外型尺寸圖

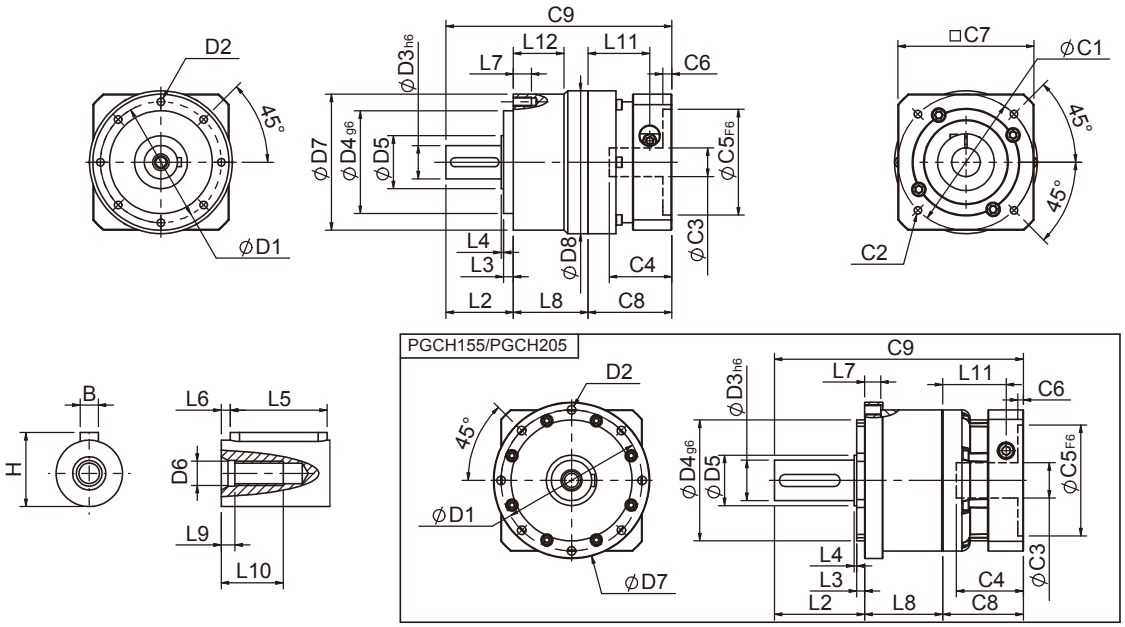

Specifications 規格

Unit:mm

尺寸 Dimensions	PGCH50	PGCH70	PGCH90	PGCH120	PGCH155	PGCH205
D1	44	62	80	108	140	184
D2	M4x0.7P	M5x0.8P	M6x1.0P	M8x1.25P	M10x1.5P	M12x1.75P
$D3_{h6}$	12	16	22	32	40	55
$D4_{g6}$	35	52	68	90	120	160
D5	15	25	35	45	50	70
D6	M4x0.7P	M5x0.8P	M8x1.25P	M12x1.75P	M16x2.0P	M20x2.5P
D7	50	70	90	120	155	205
D8	-	-	94.5	-	-	-
L2	24.5	36	44.5	60	89.5	96.5
L3	4	6	6.5	7	8	12
L4	1	1.5	1.5	3.5	2.5	2.5
L5	15	25	32	40	60	70
L6	2	2	3	5	5	6
L7	8	10	12	16	16	20
L8	29.8	38	49.5	60	77.5	98
L9	4	4	4.5	6	6	8
L10	12	16.5	20.5	30	38	48
L11	29	35.4	40.7	53.7	63	69.5
L12	-	-	33.5	-	-	-
$C1^{2}$	46	70	90	115	145	200
$C2^{2}$	M4x0.7P	M5x0.8P	M6x1.0P	M8x1.25P	M8x1.25P	M12x1.75P
$C3^{2}$	≦8/≦11	≦14/≦19	≦19/≦24	≦24/≦32/≦38	≦35/≦38	≦50
$C4^{2}$	26.5	37.6	41.4	51.3	66.5	77
$C5^{2}{}_{F6}$	30	50	70	95	110	114.3
$C6^{2}$	4.1	4.5	6	6	5.5	6
$C7^{2}$	42	60	90	115	140	180
$C8^{2}$	38.1	46.5	55.4	70	80	90
$C9^{2}$	92.4	120.5	149.4	190	247	284.5
B	4	5	6	10	12	16
H	13.5	18	24.5	35	43	59

★ C1~C9是公製標準馬達連接板尺寸,請依所選用的馬達決定.

★ 本公司有權針對以上數據規格逕行設計變更不先行告知.

★ C1~C9 are motor specific dimensions(metric std shown), Size may vary according to the motor flange chosen.

★ Specification subject to change without notice.

PGCH Double Stage Dimensions-1 PGCH雙段外型尺寸圖-1

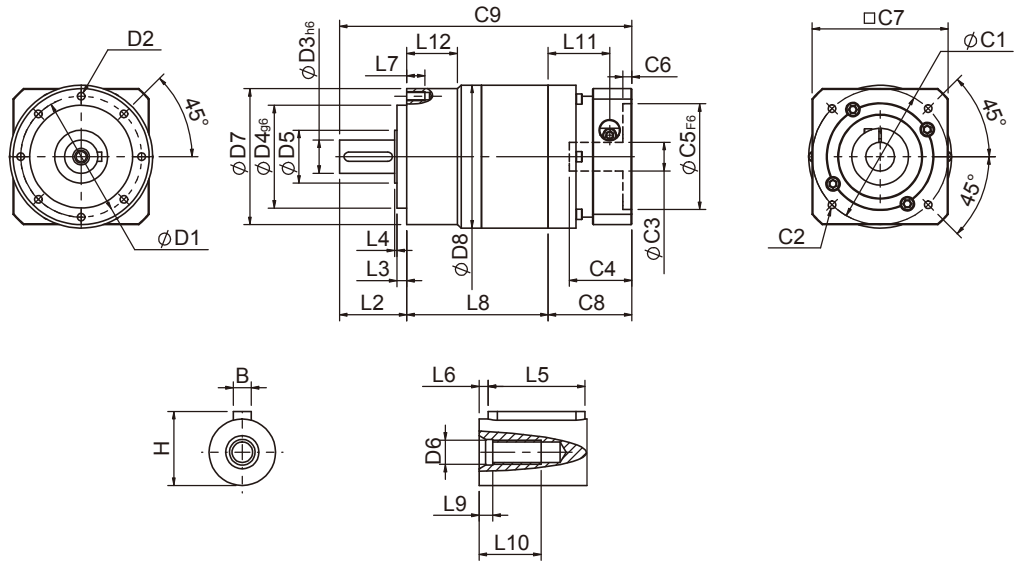

Specifications 規格

Unit:mm

尺寸 Dimensions	PGCH50	PGCH70	PGCH90
D1	4	62	80
D2	M4x0.7P	M5x0.8P	M6x1.0P
$D3_{h6}$	12	16	22
$D4_{g6}$	35	52	68
D5	15	25	35
D6	M4x0.7P	M5x0.8P	M8x1.25P
D7	50	70	90
D8	-	-	94.5
L2	24.5	36	44.5
L3	4	6	6.5
L4	1	1.5	1.5
L5	15	25	32
L6	2	2	3
L7	8	10	12
L8	56.8	71	93.5
L9	4	4	4.5
L10	12	16.5	20.5
L11	29	35.4	40.7
L12	-	-	33.5
$C1^2$	46	70	90
$C2^2$	M4x0.7P	M5x0.8P	M6x1.0P
$C3^2$	≦8/≦11	≦14/≦19	≦19/≦24
$C4^2$	26.5	37.6	41.4
$C5^2{}_{F6}$	30	50	70
$C6^2$	4.1	4.5	6
$C7^2$	42	60	90
$C8^2$	38.1	46.5	55.4
$C9^2$	119.4	153.5	193.4
B	4	5	6
H	13.5	18	24.5

★ C1~C9是公製標準馬達連接板尺寸,請依所選用的馬達決定.
★ 本公司有權針對以上數據規格逕行設計變更不先行告知.

★ C1~C9 are motor specific dimensions(metric std shown), Size may vary according to the motor flange chosen.
★ Specification subject to change without notice.

PGCH Double Stage Dimensions-2 PGCH雙段外型尺寸圖-2

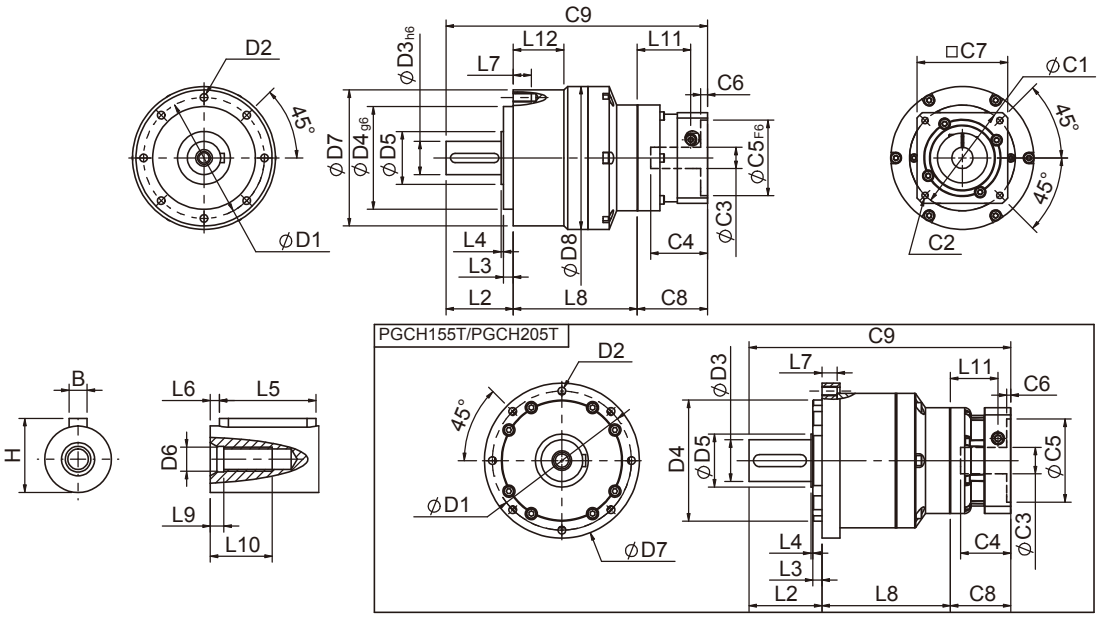

Specifications 規格

Unit:mm

尺寸 Dimensions	PGCH70T	PGCH90T	PGCH120T	PGCH155T	PGCH205T
D1	62	80	108	140	184
D2	M5x0.8P	M6x1.0P	M8x1.25P	M10x1.5P	M12x1.75P
$D3_{h6}$	16	22	32	40	55
$D4_{g6}$	52	68	90	120	160
D5	25	35	45	50	70
D6	M5x0.8P	M8x1.25P	M12x1.75P	M16x2.0P	M20x2.5P
D7	70	90	120	155	205
D8	-	94.5	-	-	-
L2	36	44.5	60	89.5	96.5
L3	6	6.5	7	8	12
L4	1.5	1.5	3.5	2.5	2.5
L5	25	32	40	60	70
L6	2	3	5	5	6
L7	10	12	16	16	20
L8	66.5	82	102.5	129.5	170
L9	4	4.5	6	6	8
L10	16.5	20.5	30	38	48
L11	29	35.4	40.7	53.7	63
L12	-	33.5	-	-	-
C1 [2]	46	70	90	115	145
C2 [2]	M4x0.7P	M5x0.8P	M6x1.0P	M8x1.25P	M8x1.25P
C3 [2]	≦8/≦11	≦14/≦19	≦19/≦24	≦24/≦32/≦38	≦35/≦38
C4 [2]	26.5	37.6	41.4	51.3	66.5
$C5^{2}_{F6}$	30	50	70	95	110
C6 [2]	4.1	4.5	6	6	5.5
C7 [2]	42	60	90	115	140
C8 [2]	38.1	46.5	55.4	70	80
C9 [2]	140.6	173	217.9	289	346.5
B	5	6	10	12	16
H	18	24.5	35	43	59

★ C1~C9是公製標準馬達連接板尺寸,請依所選用的馬達決定.

★ 本公司有權針對以上數據規格逕行設計變更不先行告知.

★ C1~C9 are motor specific dimensions(metric std shown), Size may vary according to the motor flange chosen.

★ Specification subject to change without notice.

PGCH Specifications Table PGCH性能規格共表

規格 Specifications		節數 Stage	減速比 Ratio	PGCH-50	PGCH-70	PGCH-90	PGCH-120	PGCH-155	PGCH-205
額定輸出力矩T_{2N} Nominal Output Torque	N · m	1	3	19	53	145	290	520	950
			4	20	55	150	300	550	1000
			5	17	54	140	290	600	1050
			6	15	46	135	280	560	1000
			7	14	44	125	270	530	960
			8	12	41	110	240	480	900
			9	11	37	95	220	430	800
			10	11	37	95	220	430	800
		節數 Stage	減速比 Ratio	PGCH-50	PGCH-70(T)	PGCH-90(T)	PGCH-120T	PGCH-155T	PGCH-205T
		2	15	19	53	145	290	520	950
			20	20	55	150	300	550	1000
			25	17	54	140	290	600	1050
			30	17	54	140	290	600	1050
			35	17	54	140	290	600	1050
			40	17	54	140	290	600	1050
			45	17	54	140	290	600	1050
			50	17	54	140	290	600	1050
			60	15	46	135	280	560	1000
			70	14	44	125	270	530	960
			80	12	41	110	240	480	900
			90	11	37	95	220	430	800
			100	11	37	95	220	430	800
急停力矩 T_{2NOT} Emergency Stop Torque	N · m	3.0倍額定輸出力矩 (3.0 times of Nominal Output Torque) (* 最大輸出力矩 Max. Output Torque T_{2B} =60% of Emergency Stop Torque)							
額定輸入轉速 n_{1N} Nominal Input Speed	rpm	1,2	3-100	4000	4000	3000	3000	2500	2500
最大輸入轉速 n_{1max} Max. Input Speed	rpm	1,2	3-100	8000	8000	6000	6000	5000	4000
精密背隙 Micro Backlash P0	arcmin	1	3-10	≦4	≦4	≦4	≦3	≦3	≦3
		2	12-100	≦6	≦6	≦6	≦5	≦5	≦5
精密背隙 Precision Backlash P1	arcmin	1	3-10	≦6	≦6	≦6	≦5	≦5	≦5
		2	12-100	≦8	≦8	≦8	≦7	≦7	≦7
標準背隙 Standard Backlash P2	arcmin	1	3-10	≦8	≦8	≦8	≦7	≦7	≦7
		2	12-100	≦10	≦10	≦10	≦9	≦9	≦9
扭轉剛性 Torsional Rigidity	N · m /arcmin	1,2	3-100	2.5	6	12	23	50	145
容許徑向力F_{2rB}[1] Max. Radial Load	N	1,2	3-100	640	1260	2230	4300	7140	11050
容許軸向力F_{2aB}[1] Max. Axial Load	N	1,2	3-100	410	600	1500	3310	4670	6460
使用溫度Operating Temp.	℃		3-100	-10℃~+90℃					
使用壽命Service Life	hr		3-100	20,000 (10,000/連續運轉 Continuous operation)					
效率 Efficiency	%	1	3-10	≧ 97%					
		2	12-100	≧ 94%					
重量 Weight	kg	1	3-10	0.6	1.3	3.5	7.8	16.1	27
		2	12-100	0.9	2.0/1.6	5.6/3.9	9.5	19	34
安裝方向Mounting Position	-	1,2	3-100	任意方向 Any Direction					
噪音值Noise Level[2]	dBA/1m	1,2	3-100	58	60	63	65	67	68
防護等級Protection Class	-	1,2	3-100	IP65					
潤滑 Lubrication	-	1,2	3-100	全合成潤滑油脂 Synthetic Lubricant					

減速機轉動慣量 Inertia(J1)

節數 Stage	減速比 Ratio	單位 unit	PGCH-50	PGCH-70	PGCH-90	PGCH-120	PGCH-155	PGCH-205
1	3	Kg · cm²	0.03	0.23	0.97	2.35	10.00	30.50
	4		0.02	0.18	0.67	1.66	7.17	25.86
	5		0.02	0.17	0.65	1.50	6.52	23.63
	6/7/8		0.02	0.14	0.60	1.45	6.17	22.92
	9/10		0.02	0.14	0.58	1.41	6.10	22.73
節數 Stage	減速比 Ratio		PGCH-50	PGCH-70(T)	PGCH-90(T)	PGCH-120T	PGCH-155T	PGCH-205T
2	15/20/25		0.02	0.17(0.02)	0.65(0.17)	0.65	1.50	6.52
	30/35/40		0.02	0.14(0.02)	0.60(0.14)	0.60	1.45	6.17
	45/50/60/70/80/90/100		0.02	0.14(0.02)	0.58(0.14)	0.58	1.41	6.10

* 1. 輸出轉速 100rpm 時，作用於輸出軸中心位置。Applied to the output shaft center @100rpm.
* 2. 3000rpm 空載量測。Measured at 3000 rpm with no load. These values are measured by gearbox with ratio = 10 (1-stage) or ratio = 100 (2-stage) at nominal input speed or 3000 rpm (if nominal input speed is higher than 3000 rpm) with no load.

※本公司有權對以上數據規格逕行設計變更不先行告知。The above figures/specifications are subject to change without prior notice.

Products due to human error, natural disasters or other factors lead to poor or damaged, will not be covered under warranty.
產品因人為原因或天災等因素導致不良或損壞，不在保固範圍內。

PGEH SERIES

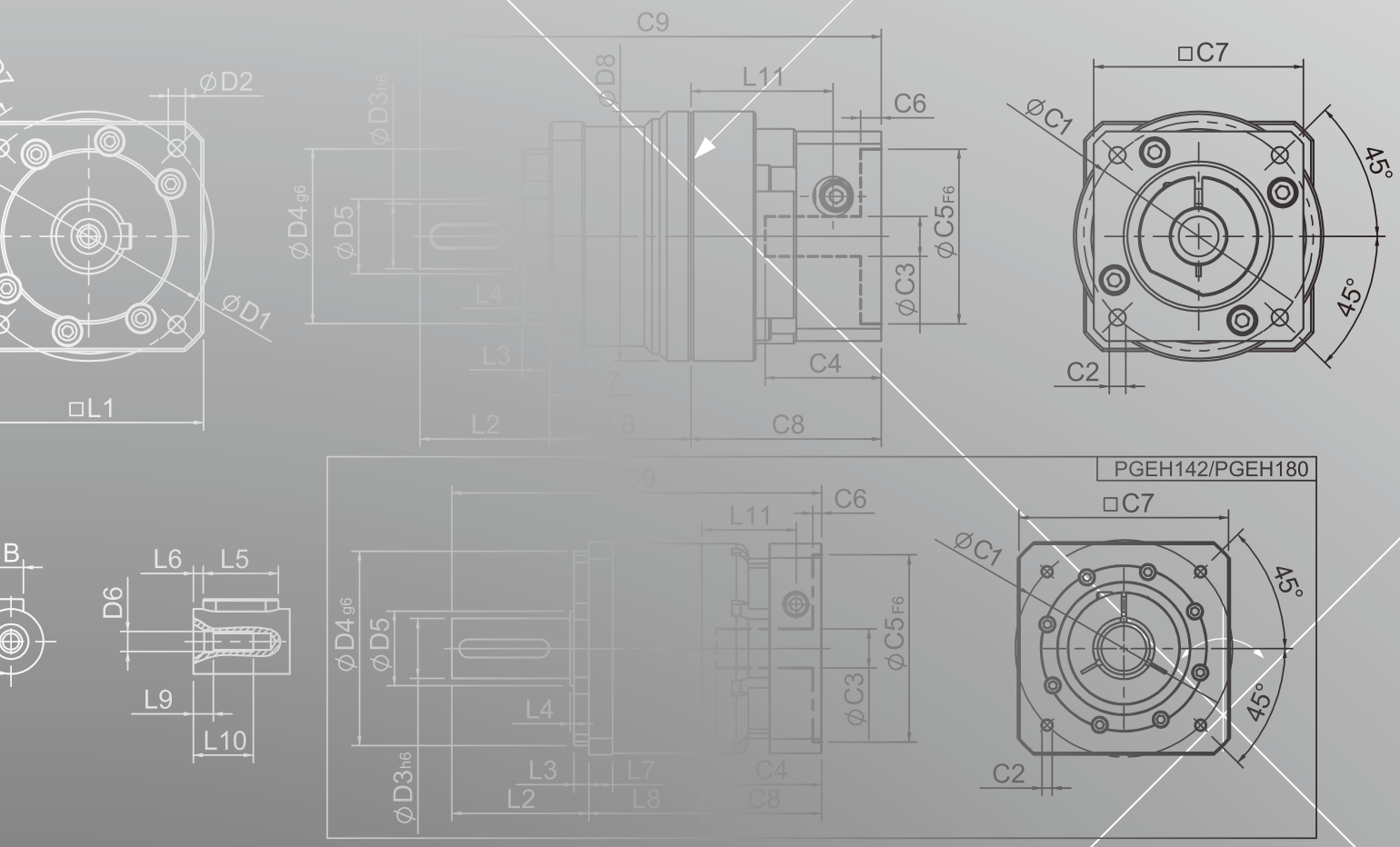
PGEH142/PGEH180
C9
C6
L11
□C7
ØC1
45°
ØD2
ØD1
□L1
ØD4g6
ØD5
ØD3h6
ØD8
ØC5F6
ØC3
L4
L3
L7
L2
L8
C4
C8
C2
B
L6
L5
D6
L9
L10

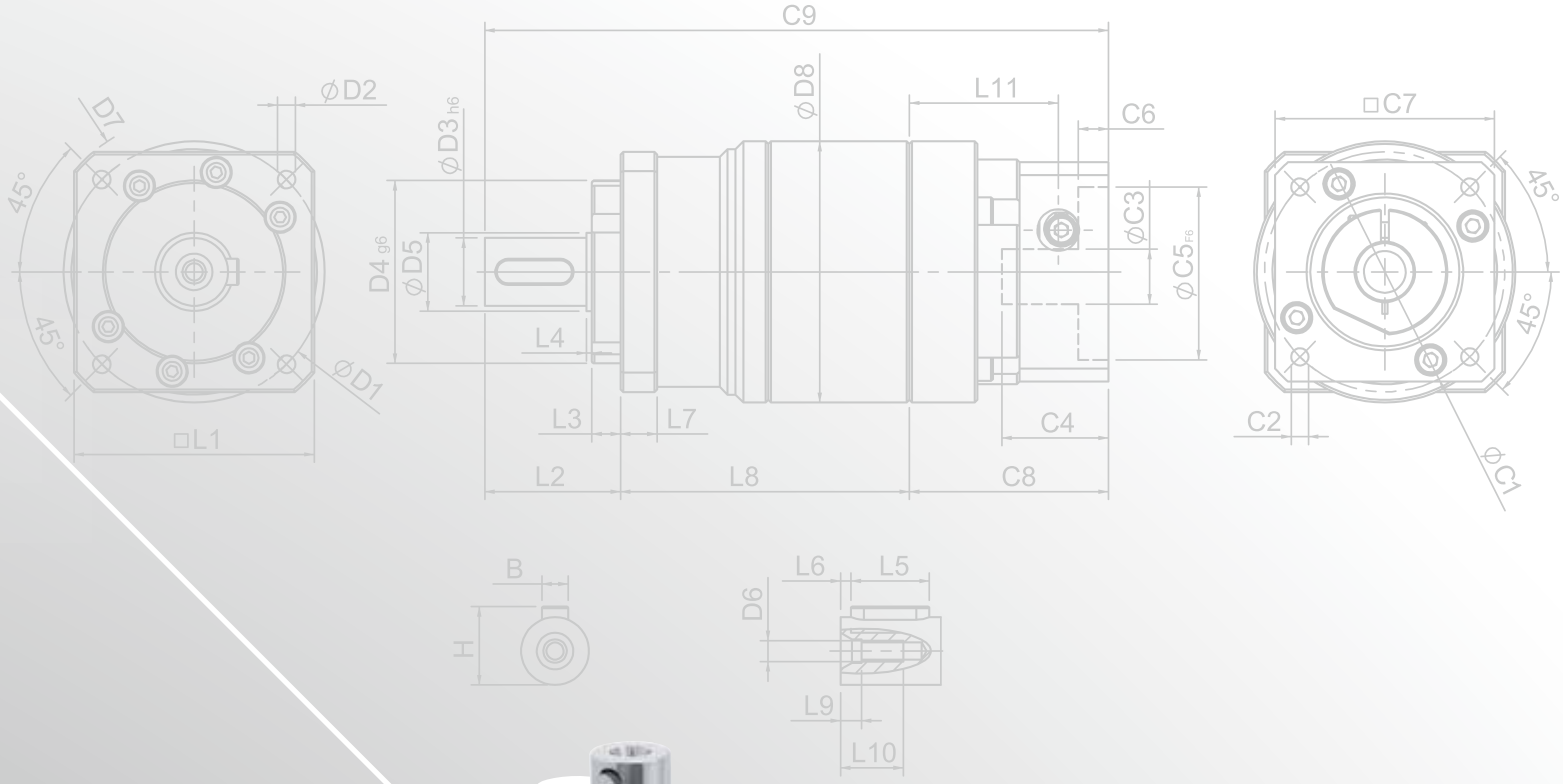
C9
ØD2
D7
45°
45°
ØD1
□L1
ØD3h6
D4g6
ØD5
L4
L3
L7
L2
L8
ØD8
L11
C6
ØC3
ØC5F6
C4
C8
□C7
45°
45°
C2
ØC1
B
H
L6
L5
D6
L9
L10

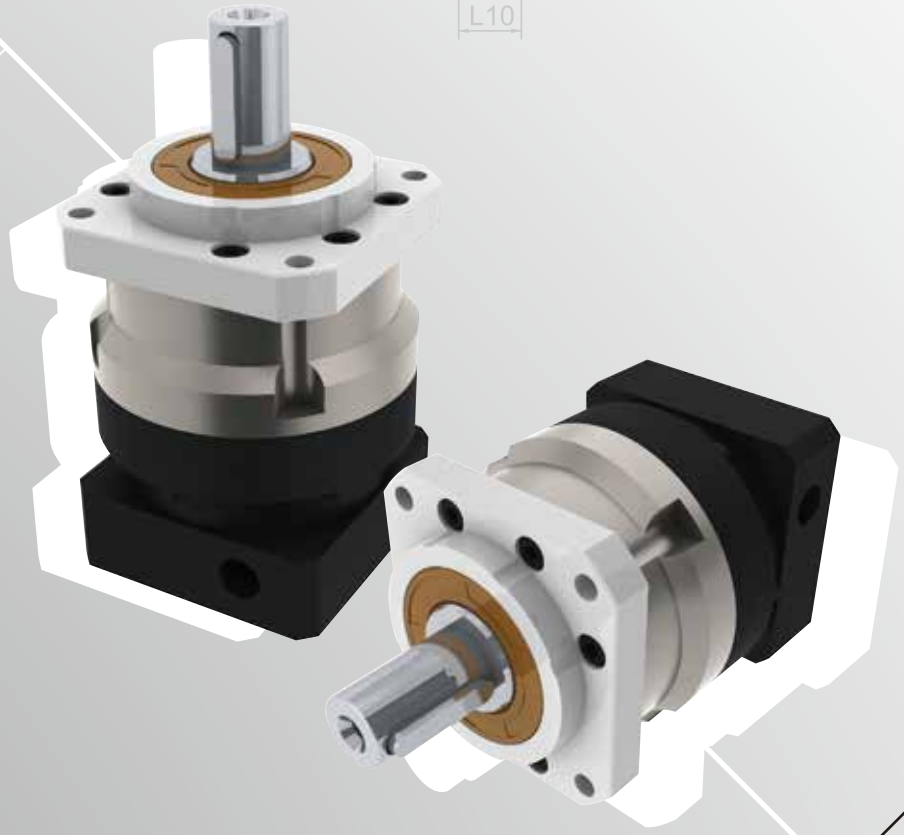

PGEH Single Stage Dimensions PGEH單段外型尺寸圖

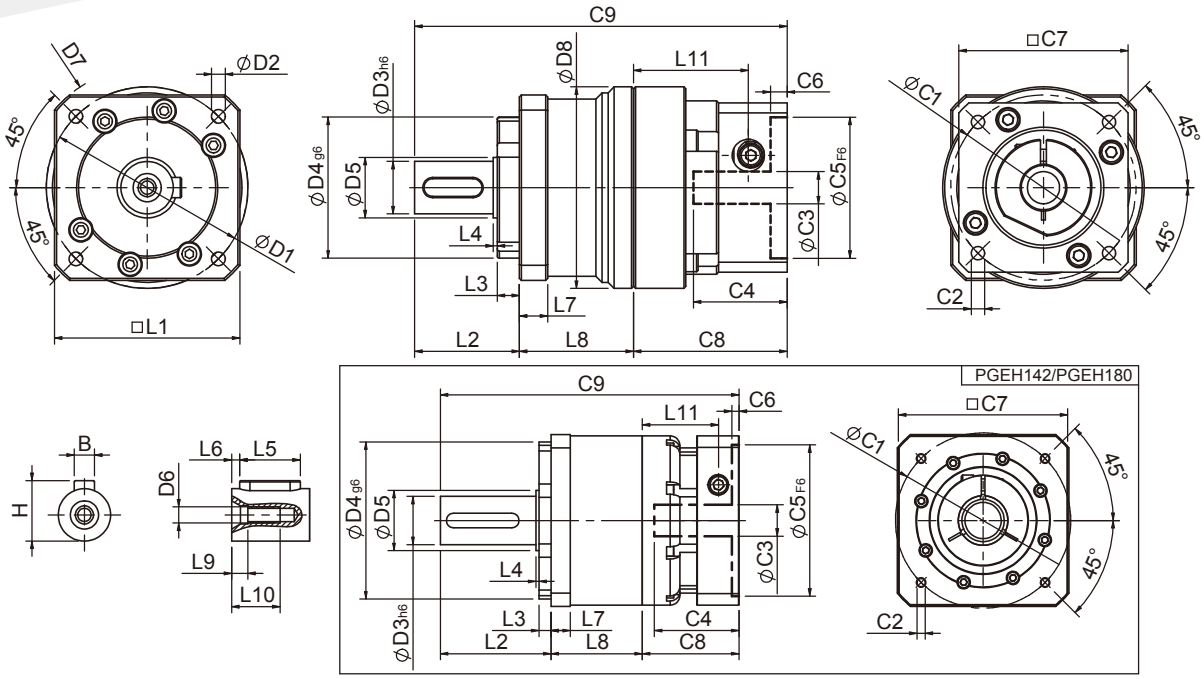

Specifications 規格

Unit:mm

尺寸 Dimensions	PGEH50	PGEH70	PGEH90	PGEH120	PGEH142	PGEH180
D1	50	70	100	130	165	215
D2	3.4	5.5	6.8	9	10.5	13
D3 h6	13	16	22	32	40	55
D4 g6	35	50	80	110	130	160
D5	15	25	35	45	50	70
D6	M4x0.7P	M5x0.8P	M8x1.25P	M12x1.75P	M16x2.0P	M20x2.5P
D7	60	82	118	148	186	239
D8	50	70	94.5	120	-	-
L1	46	64	90	118	142	182
L2	26	37	43	59	91.5	100.5
L3	5.5	7	5	6	10	16
L4	1	1.5	1.5	3.5	2.5	2.5
L5	15	25	32	40	60	70
L6	2	2	3	5	5	6
L7	7	9.7	13.5	15.7	16	20
L8	28.3	37	51	61	75.5	94
L9	4	4	4.5	6	6	8
L10	12	16.5	20.5	30	38	48
L11	28.5	35.5	40.7	53.8	62.8	70
C1 [2]	46	70	90	115	145	200
C2 [2]	M4x0.7P	M5x0.8P	M6x1.0P	M8x1.25P	M8x1.25P	M12x1.75P
C3 [2]	≦8/≦11	≦14/≦19	≦19/≦24	≦24/≦32/≦38	≦35/≦38	≦50
C4 [2]	26.5	37.6	41.4	51.3	66.5	82
C5 [2] F6	30	50	70	95	110	114.3
C6 [2]	4.1	4.5	6	6	5.5	10
C7 [2]	42	60	90	115	140	180
C8 [2]	38.1	46.5	55.4	70	80	95
C9 [2]	92.4	120.5	149.4	190	247	289.5
B	5	5	6	10	12	16
H	15	18	24.5	35	43	59

★ C1~C9是公製標準馬達連接板尺寸,請依所選用的馬達決定.

★ 本公司有權針對以上數據規格逕行設計變更不先行告知.

★ C1~C9 are motor specific dimensions(metric std shown), Size may vary according to motor flange.

★ Specification subject to change without notice.

PGEH Double Stage Dimensions-1 PGEH雙段外型尺寸圖-1

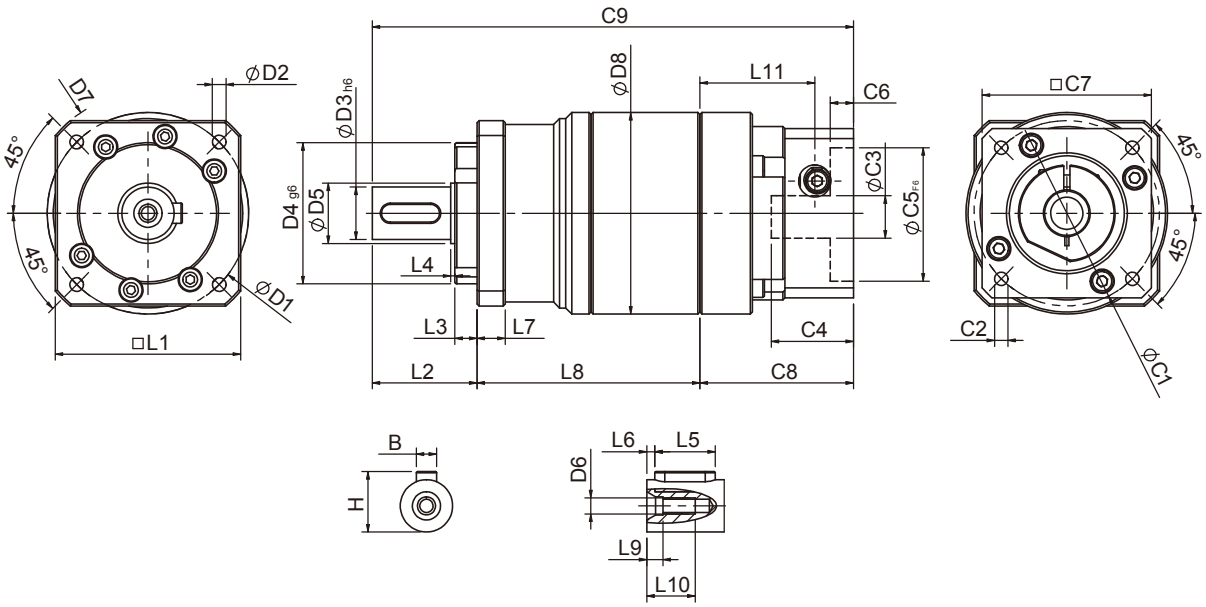

Specifications 規格

Unit:mm

尺寸 Dimensions	PGEH50	PGEH70	PGEH90
D1	50	70	100
D2	3.4	5.5	6.8
D3 h6	13	16	22
D4 g6	35	50	80
D5	15	25	35
D6	M4x0.7P	M5x0.8P	M8x1.25P
D7	60	82	118
D8	50	70	94.5
L1	46	64	90
L2	26	37	43
L3	5.5	7	5
L4	1	1.5	1.5
L5	15	25	32
L6	2	2	3
L7	7	9.7	13.5
L8	55.3	70	95
L9	4	4	4.5
L10	12	16.5	20.5
L11	28.5	35.5	40.7
C1 [2]	46	70	90
C2 [2]	M4x0.7P	M5x0.8P	M6x1.0P
C3 [2]	≦8/≦11	≦14/≦19	≦19/≦24
C4 [2]	26.5	37.6	41.4
C5 [2] F6	30	50	70
C6 [2]	4.1	4.5	6
C7 [2]	42	60	90
C8 [2]	38.1	46.5	55.4
C9 [2]	119.4	153.5	193.4
B	5	5	6
H	15	18	24.5

★ C1~C9是公製標準馬達連接板尺寸,請依所選用的馬達決定.
★ 本公司有權針對以上數據規格逕行設計變更不先行告知.

★ C1~C9 are motor specific dimensions(metric std shown), Size may vary according to motor flange.
★ Specification subject to change without notice.

PGEH Double Stage Dimensions-2 PGEH雙段外型尺寸圖-2

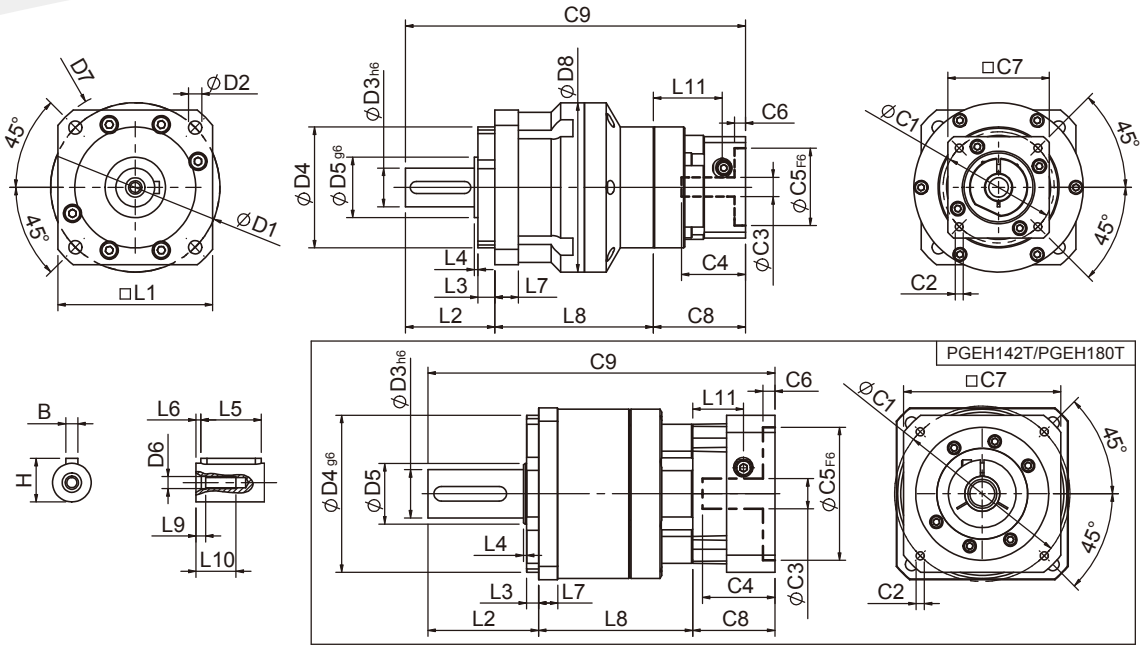

Specifications 規格

Unit:mm

尺寸 Dimensions	PGEH70T	PGEH90T	PGEH120T	PGEH142T	PGEH180T
D1	70	100	130	165	215
D2	5.5	6.8	9	10.5	13
D3h6	16	22	32	40	55
D4g6	50	80	110	130	160
D5	25	35	45	50	70
D6	M5x0.8P	M8x1.25P	M12x1.75P	M16x2.0P	M20x2.5P
D7	82	118	148	186	239
D8	70	94.5	120	-	-
L1	64	90	118	142	182
L2	37	43	59	91.5	100.5
L3	7	5	6	10	16
L4	1.5	1.5	3.5	2.5	2.5
L5	25	32	40	60	70
L6	2	3	5	5	6
L7	9.7	13.5	15.7	16	20
L8	65.5	83.5	103.5	127.5	166
L9	4	4.5	6	6	8
L10	16.5	20.5	30	38	48
L11	28.5	35.5	40.7	41.8	62.8
C1[2]	46	70	90	115	145
C2[2]	M4x0.7P	M5x0.8P	M6x1.0P	M8x1.25P	M8x1.25P
C3[2]	≦8/≦11	≦14/≦19	≦19/≦24	≦24/≦32/≦38	≦35
C4[2]	26.5	37.6	41.4	56	66.5
C5[2]F6	30	50	70	95	110
C6[2]	4.1	4.5	6	10	5.5
C7[2]	42	60	90	115	140
C8[2]	38.1	46.5	55.4	63	80
C9[2]	140.6	173	217.9	282	346.5
B	5	6	10	12	16
H	18	24.5	35	43	59

★ C1~C9是公製標準馬達連接板尺寸,請依所選用的馬達決定.

★ 本公司有權針對以上數據規格逕行設計變更不先行告知.

★ C1~C9 are motor specific dimensions(metric std shown), Size may vary according to the motor flange chosen.

★ Specification subject to change without notice.

PGEH Specifications Table PGEH性能規格共表

規格 Specifications		節數 Stage	減速比 Ratio	PGEH-50	PGEH-70	PGEH-90	PGEH-120	PGEH-142	PGEH-180
額定輸出力矩T_{2N} Nominal Output Torque	N · m	1	3	19	53	145	290	520	950
			4	20	55	150	300	550	1000
			5	17	54	140	290	600	1050
			6	15	46	135	280	560	1000
			7	14	44	125	270	530	960
			8	12	41	110	240	480	900
			9	11	37	95	220	430	800
			10	11	37	95	220	430	800
		節數 Stage	減速比 Ratio	PGEH-50	PGEH-70(T)	PGEH-90(T)	PGEH-120T	PGEH-142T	PGEH-180T
		2	15	19	53	145	290	520	950
			20	20	55	150	300	550	1000
			25	17	54	140	290	600	1050
			30	17	54	140	290	600	1050
			35	17	54	140	290	600	1050
			40	17	54	140	290	600	1050
			45	17	54	140	290	600	1050
			50	17	54	140	290	600	1050
			60	15	46	135	280	560	1000
			70	14	44	125	270	530	960
			80	12	41	110	240	480	900
			90	11	37	95	220	430	800
			100	11	37	95	220	430	800
急停力矩 T_{2NOT} Emergency Stop Torque	N · m	3.0倍額定輸出力矩 (3.0 times of Nominal Output Torque) (* 最大輸出力矩 Max. Output Torque T_{2B} =60% of Emergency Stop Torque)							
額定輸入轉速 n_{1N} Nominal Input Speed	rpm	1,2	3-100	4000	4000	3000	3000	2500	2500
最大輸入轉速 n_{1max} Max. Input Speed	rpm	1,2	3-100	8000	8000	6000	6000	5000	4000
精密背隙 Micro Backlash P0	arcmin	1	3-10	≦4	≦4	≦4	≦3	≦3	≦3
		2	12-100	≦6	≦6	≦6	≦5	≦5	≦5
精密背隙 Precision Backlash P1	arcmin	1	3-10	≦6	≦6	≦6	≦5	≦5	≦5
		2	12-100	≦8	≦8	≦8	≦7	≦7	≦7
標準背隙 Standard Backlash P2	arcmin	1	3-10	≦8	≦8	≦8	≦7	≦7	≦7
		2	12-100	≦10	≦10	≦10	≦9	≦9	≦9
扭轉剛性 Torsional Rigidity	N · m /arcmin	1,2	3-100	2.5	6	12	23	50	145
容許徑向力F_{2rB}[1] Max. Radial Load	N	1,2	3-100	640	1260	2230	4300	7140	11050
容許軸向力F_{2aB}[1] Max. Axial Load	N	1,2	3-100	410	600	1500	3310	4670	6460
使用溫度Operating Temp.	℃		3-100	-10℃~+90℃					
使用壽命Service Life	hr		3-100	20,000 (10,000/連續運轉 Continuous operation)					
效率 Efficiency	%	1	3-10	≧ 97%					
		2	12-100	≧ 94%					
重量 Weight	kg	1	3-10	0.6	1.3	3.5	7.8	16.1	27
		2	12-100	0.9	2.0/1.6	5.6/3.9	9.5	19	34
安裝方向Mounting Position	-	1,2	3-100	任意方向 Any Direction					
噪音值Noise Level[2]	dBA/1m	1,2	3-100	58	60	63	65	67	68
防護等級Protection Class	-	1,2	3-100	IP65					
潤滑 Lubrication	-	1,2	3-100	全合成潤滑油脂 Synthetic Lubricant					

減速機轉動慣量 Inertia(J1)

節數 Stage	減速比 Ratio	單位 unit	PGEH-50	PGEH-70	PGEH-90	PGEH-120	PGEH-142	PGEH-180
1	3	Kg · cm²	0.03	0.23	0.97	2.35	10.00	30.50
	4		0.02	0.18	0.67	1.66	7.17	25.86
	5		0.02	0.17	0.65	1.50	6.52	23.63
	6/7/8		0.02	0.14	0.60	1.45	6.17	22.92
	9/10		0.02	0.14	0.58	1.41	6.10	22.73
節數 Stage	減速比 Ratio		PGEH-50	PGEH-70(T)	PGEH-90(T)	PGEH-120T	PGEH-142T	PGEH-180T
2	15/20/25		0.02	0.17(0.02)	0.65(0.17)	0.65	1.50	6.52
	30/35/40		0.02	0.14(0.02)	0.60(0.14)	0.60	1.45	6.17
	45/50/60/70/80/90/100		0.02	0.14(0.02)	0.58(0.14)	0.58	1.41	6.10

* 1. 輸出轉速 100rpm 時，作用於輸出軸中心位置。Applied to the output shaft center @100rpm.
* 2. 3000rpm 空載量測。Measured at 3000 rpm with no load. These values are measured by gearbox with ratio = 10 (1-stage) or ratio = 100 (2-stage) at nominal input speed or 3000 rpm (if nominal input speed is higher than 3000 rpm) with no load.

※本公司有權對以上數據規格逕行設計變更不先行告知。The above figures/specifications are subject to change without prior notice.

Products due to human error, natural disasters or other factors lead to poor or damaged, will not be covered under warranty.
產品因人為原因或天災等因素導致不良或損壞，不在保固範圍內。

PGSH SERIES

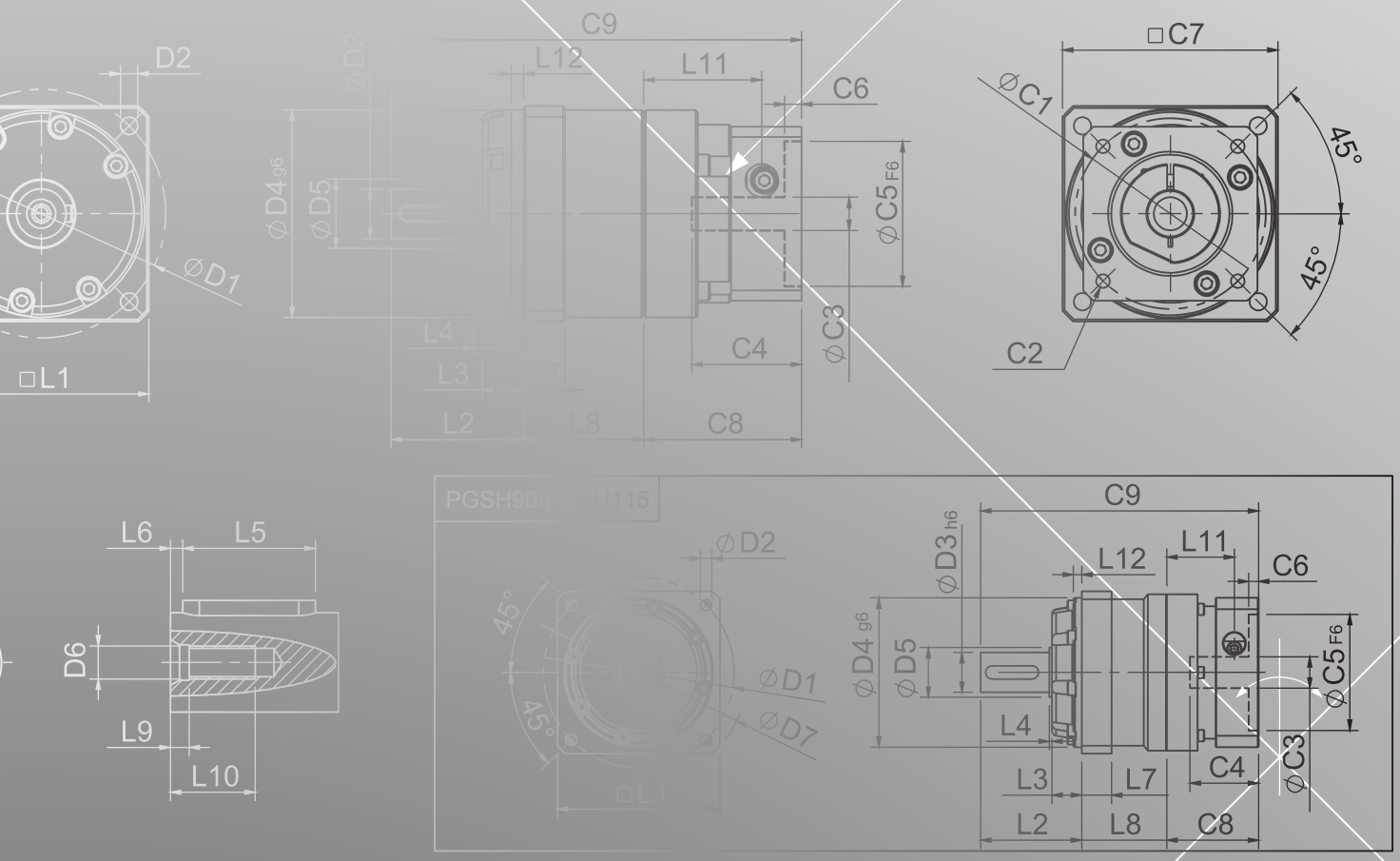
D2
ØD1
□L1
C9
L12
L11
C6
ØD3 h6
ØD4 g6
ØD5
ØC5 F6
ØC3
L4
L3
L2
L8
C4
C8
□C7
ØC1
45°
45°
C2
L6
L5
D6
L9
L10
PGSH90/PGSH115
ØD2
45°
45°
ØD1
ØD7
□L1
C9
ØD3 h6
L12
L11
C6
ØD4 g6
ØD5
ØC5 F6
L4
L3
L7
C4
ØC3
L2
L8
C8

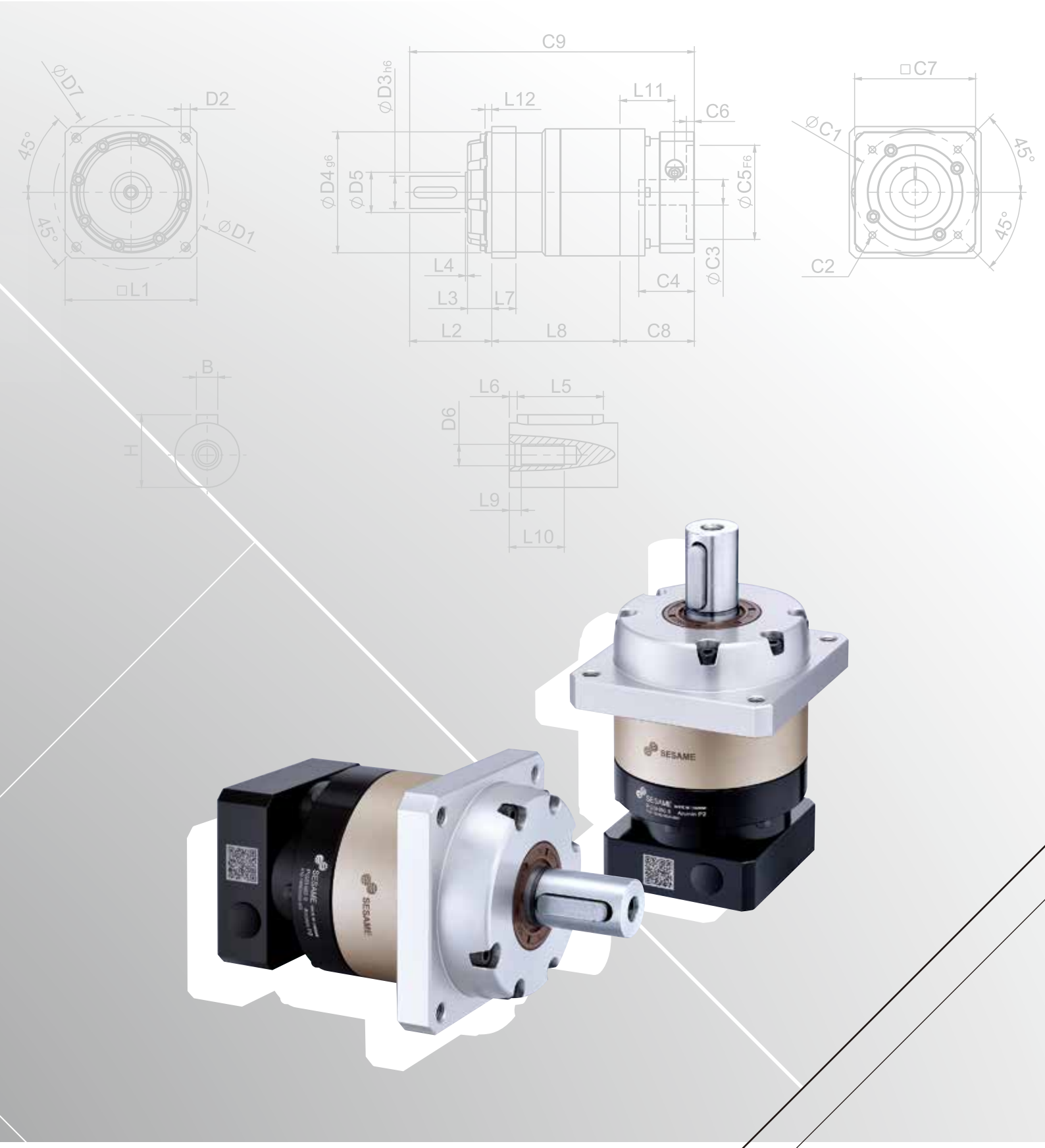
ØD7
D2
45°
45°
ØD1
□L1
C9
ØD3h6
L12
L11
C6
ØD4g6
ØD5
ØC5F6
ØC3
L4
L3
L7
C4
L2
L8
C8
□C7
ØC1
45°
45°
C2
B
H
L6
L5
D6
L9
L10
SESAME

PGSH Single Stage Dimensions PGSH單段外型尺寸圖

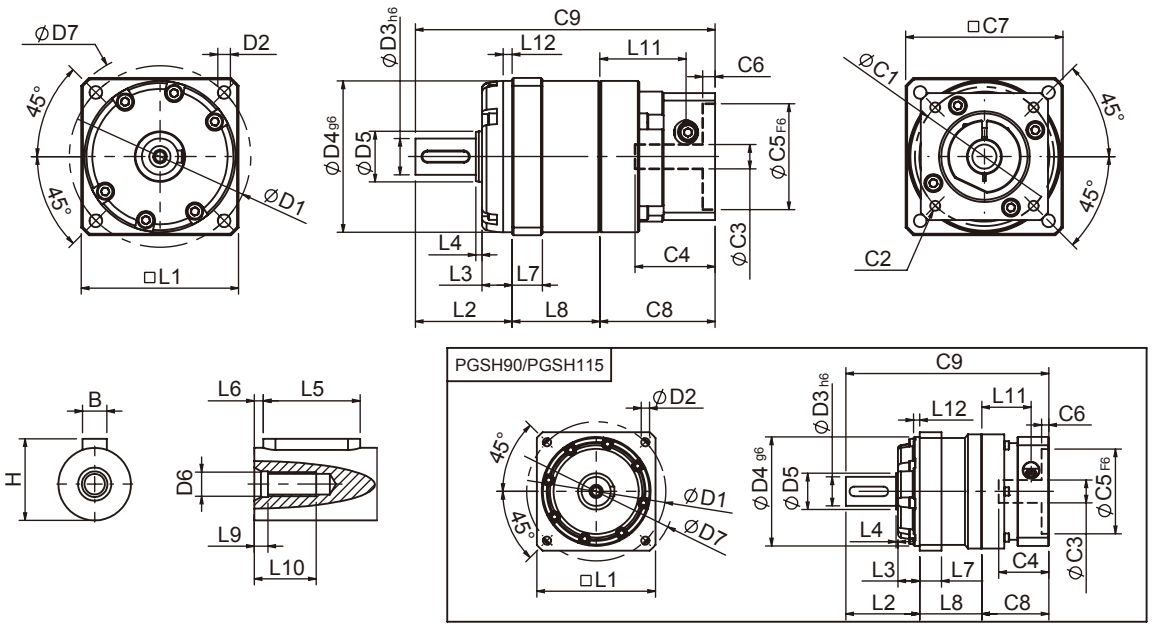

Specifications 規格

Unit:mm

尺寸 Dimensions	PGSH42	PGSH60	PGSH90	PGSH115
D1	60	90	115	135
D2	M5x0.8P	M6x1.0P	M8x1.25P	M10x1.5P
D3 h6	12	19	24	32
D4 g6	50	70	90	110
D5	16.7	20	30	45
D6	M4x0.7P	M6x1.0P	M8x1.25P	M12x1.75P
D7	70	104	132	164
L1	52	78	98	120
L2	32	50	61	75
L3	10	17	18	14.5
L4	2	3	1.5	5.5
L5	16	25	32	40
L6	2	3	3	5
L7	10	12	18	18.5
L8	29	37.8	51.4	63.8
L9	4	4	4.5	6
L10	12	16.5	20.5	30
L11	28.5	35.5	40.7	53.8
L12	3	4	5	5
C1 [2]	46	70	90	115
C2 [2]	M4x0.7P	M5x0.8P	M6x1.0P	M8x1.25P
C3 [2]	≦8/≦11	≦14/≦19	≦19/≦24	≦24/≦32/≦38
C4 [2]	26.5	37.6	41.4	51.3
C5 [2] F6	30	50	70	95
C6 [2]	4.1	4.5	6	6
C7 [2]	42	60	90	115
C8 [2]	38.1	46.5	55.4	70
C9 [2]	99.1	134.3	167.8	208.8
B	4	6	8	10
H	13.5	21.5	27	35

★ C1~C9是公製標準馬達連接板尺寸,請依所選用的馬達決定.

★ 本公司有權針對以上數據規格逕行設計變更不先行告知.

★ C1~C9 are motor specific dimensions(metric std shown), Size may vary according to motor flange.

★ Specification subject to change without notice.

PGSH Double Stage Dimensions-1 PGSH雙段外型尺寸圖-1

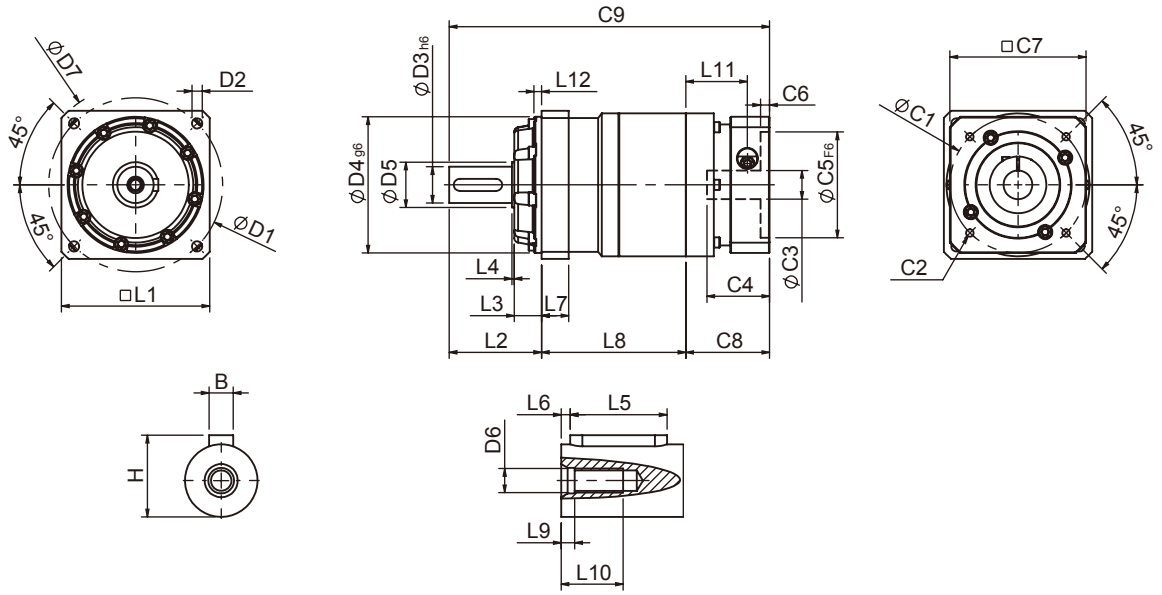

Specifications 規格

Unit:mm

尺寸 Dimensions	PGSH42	PGSH60	PGSH90
D1	60	90	115
D2	M5x0.8P	M6x1.0P	M8x1.25P
D3 h6	12	19	24
D4 g6	50	70	90
D5	16.7	20	30
D6	M4x0.7P	M6x1.0P	M8x1.25P
D7	70	104	132
L1	52	78	98
L2	32	50	61
L3	10	17	18
L4	2	3	1.5
L5	16	25	32
L6	2	3	3
L7	10	12	18
L8	56	70.8	95.4
L9	4	4	4.5
L10	12	16.5	20.5
L11	28.5	35.5	40.7
L12	3	4	5
C1 [2]	46	70	90
C2 [2]	M4x0.7P	M5x0.8P	M6x1.0P
C3 [2]	≦8/≦11	≦14/≦19	≦19/≦24
C4 [2]	26.5	37.6	41.4
C5 [2] F6	30	50	70
C6 [2]	4.1	4.5	6
C7 [2]	42	60	90
C8 [2]	38.1	46.5	55.4
C9 [2]	126.1	167.3	211.8
B	4	6	8
H	13.5	21.5	27

★ C1~C9是公製標準馬達連接板尺寸,請依所選用的馬達決定.
★ 本公司有權針對以上數據規格逕行設計變更不先行告知.

★ C1~C9 are motor specific dimensions(metric std shown), Size may vary according to motor flange.
★ Specification subject to change without notice.

PGSH Double Stage Dimensions-2 PGSH雙段外型尺寸圖-2

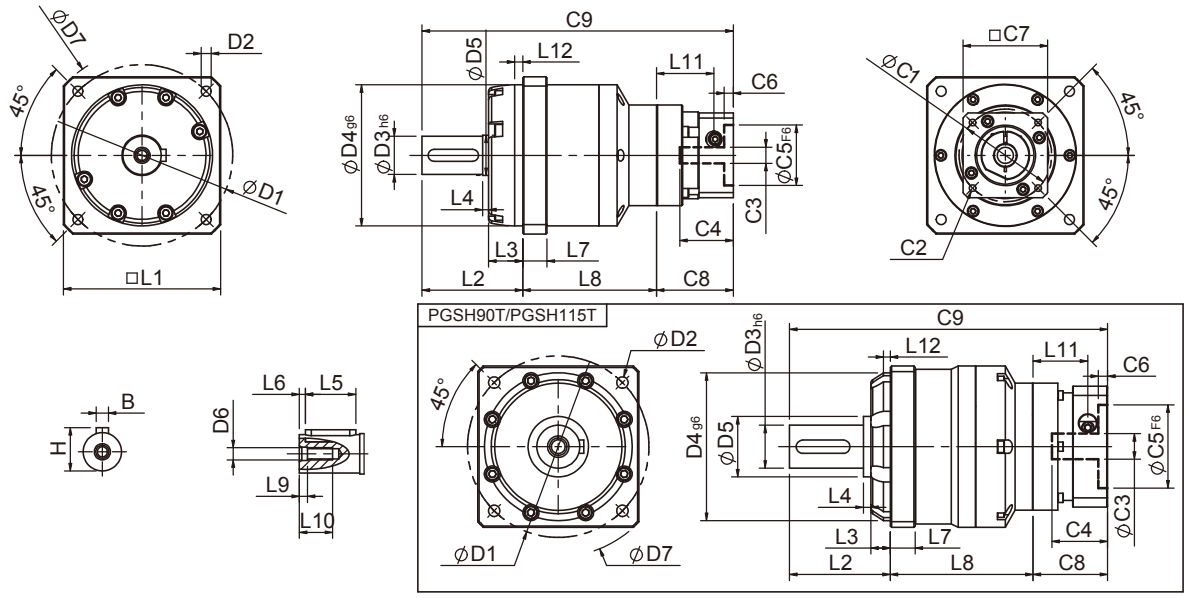

Specifications 規格

Unit:mm

尺寸 Dimensions	PGSH60T	PGSH90T	PGSH115T
D1	90	115	135
D2	M6x1.0P	M8x1.25P	M10x1.5P
$D3_{h6}$	19	24	32
$D4_{g6}$	70	90	110
D5	20	30	45
D6	M6x1.0P	M8x1.25P	M12x1.75P
D7	104	132	164
L1	78	98	120
L2	50	61	75
L3	17	18	14.5
L4	3	1.5	5.5
L5	25	32	40
L6	3	3	5
L7	12	18	18.6
L8	66.3	83.9	106.5
L9	4	4.5	6
L10	16.5	20.5	30
L11	28.5	35.5	40.7
L12	4	5	5
$C1^{2}$	46	70	90
$C2^{2}$	M4x0.7P	M5x0.8P	M6x1.0P
$C3^{2}$	≦8/≦11	≦14/≦19	≦19/≦24
$C4^{2}$	26.5	37.6	41.4
$C5^{2}{}_{F6}$	30	50	70
$C6^{2}$	4.1	4.5	6
$C7^{2}$	42	60	90
$C8^{2}$	38.1	46.5	55.4
$C9^{2}$	154.4	191.4	236.7
B	6	8	10
H	21.5	27	35

★ C1~C9是公製標準馬達連接板尺寸,請依所選用的馬達決定.

★ 本公司有權針對以上數據規格逕行設計變更不先行告知.

★ C1~C9 are motor specific dimensions(metric std shown), Size may vary according to the motor flange chosen.

★ Specification subject to change without notice.

PGSH Specifications Table PGSH性能規格共表

規格 Specifications		節數 Stage	減速比 Ratio	PGSH-42A	PGSH-42	PGSH-60	PGSH-90	PGSH-115	PGSH-142
額定輸出力矩T_{2N} Nominal Output Torque	N · m	1	3	8	15	53	145	290	520
			4	10	17	55	150	300	550
			5	10	16	54	140	290	600
			6	10	15	46	135	280	560
			7	10	14	44	125	270	530
			8	9	12	41	110	240	480
			9	9	11	37	95	220	430
			10	9	11	37	95	220	430
		節數 Stage	減速比 Ratio	PGSH-42A	PGSH-42	PGSH-60 / PGSH-60T	PGSH-90 / PGSH-90T	PGSH-115T	PGSH-142T
		2	15	8	15	53	145	290	520
			20	10	17	55	150	300	550
			25	10	16	54	140	290	600
			30	10	16	54	140	290	600
			35	10	16	54	140	290	600
			40	10	16	54	140	290	600
			45	10	16	54	140	290	600
			50	10	16	54	140	290	600
			60	10	15	46	135	280	560
			70	10	14	44	125	270	530
			80	9	12	41	110	240	480
			90	9	11	37	95	220	430
			100	9	11	37	95	220	430
急停力矩 T_{2NOT} Emergency Stop Torque	N · m	3.0倍額定輸出力矩 (3.0 times of Nominal Output Torque) (* 最大輸出力矩 Max. Output Torque T_{2B} =60% of Emergency Stop Torque)							
額定輸入轉速 n_{1N} Nominal Input Speed	rpm	1,2	3-100	4000	4000	4000	3000	3000	2500
最大輸入轉速 n_{1max} Max. Input Speed	rpm	1,2	3-100	8000	8000	8000	6000	6000	5000
精密背隙 Precision Backlash P1	arcmin	1	3-10	≦6	≦6	≦6	≦6	≦5	≦5
		2	12-100	≦8	≦8	≦8	≦8	≦7	≦7
標準背隙 Standard Backlash P2	arcmin	1	3-10	≦8	≦8	≦8	≦8	≦7	≦7
		2	12-100	≦10	≦10	≦10	≦10	≦9	≦9
扭轉剛性 Torsional Rigidity	N · m /arcmin	1,2	3-100	2.5	2.5	6	12	23	50
容許徑向力F_{2rB}[1] Max. Radial Load	N	1,2	3-100	1120	1120	1720	2800	4600	8300
容許軸向力F_{2aB}[1] Max. Axial Load	N	1,2	3-100	520	520	830	1730	2950	4670
使用溫度Operating Temp.	℃		3-100	-10℃~+90℃					
使用壽命Service Life	hr		3-100	20,000 (10,000/連續運轉 Continuous operation)					
效率 Efficiency	%	1	3-10	≧ 97%					
		2	12-100	≧ 94%					
重量 Weight	kg	1	3-10	0.6	0.6	1.3	3.5	7.8	16.1
		2	12-100	0.9	0.9	2.0/1.6	5.6/3.9	9.5	19
安裝方向Mounting Position	-	1,2	3-100	任意方向 Any Direction					
噪音值Noise Level[2]	dBA/1m	1,2	3-100	58	58	60	63	65	67
防護等級Protection Class	-	1,2	3-100	IP65					
潤滑 Lubrication	-	1,2	3-100	全合成潤滑油脂 Synthetic Lubricant					

減速機轉動慣量 Inertia(J1)

節數 Stage	減速比 Ratio	單位 unit	PGSH-42A	PGSH-42	PGSH-60	PGSH-90	PGSH-115	PGSH-142
1	3	Kg · cm²	0.03	0.03	0.23	0.97	2.35	10.00
	4		0.02	0.02	0.18	0.67	1.66	7.17
	5		0.02	0.02	0.17	0.65	1.50	6.52
	6/7/8		0.02	0.02	0.14	0.60	1.45	6.17
	9/10		0.02	0.02	0.14	0.58	1.41	6.10
節數 Stage	減速比 Ratio		PGSH-42A	PGSH-42	PGSH-60(T)	PGSH-90(T)	PGSH-115T	PGSH-142T
2	15/20/25		0.02	0.02	0.17(0.02)	0.65(0.17)	0.65	1.50
	30/35/40		0.02	0.02	0.14(0.02)	0.60(0.14)	0.60	1.45
	45/50/60/70/80/90/100		0.02	0.02	0.14(0.02)	0.58(0.14)	0.58	1.41

* 1. 輸出轉速 100rpm 時，作用於輸出軸中心位置。Applied to the output shaft center @100rpm.
* 2. 3000rpm 空載量測。Measured at 3000 rpm with no load. These values are measured by gearbox with ratio = 10 (1-stage) or ratio = 100 (2-stage) at nominal input speed or 3000 rpm (if nominal input speed is higher than 3000 rpm) with no load.

※本公司有權對以上數據規格逕行設計變更不先行告知。The above figures/specifications are subject to change without prior notice.

Products due to human error, natural disasters or other factors lead to poor or damaged, will not be covered under warranty.
產品因人為原因或天災等因素導致不良或損壞，不在保固範圍內。

PGL SERIES

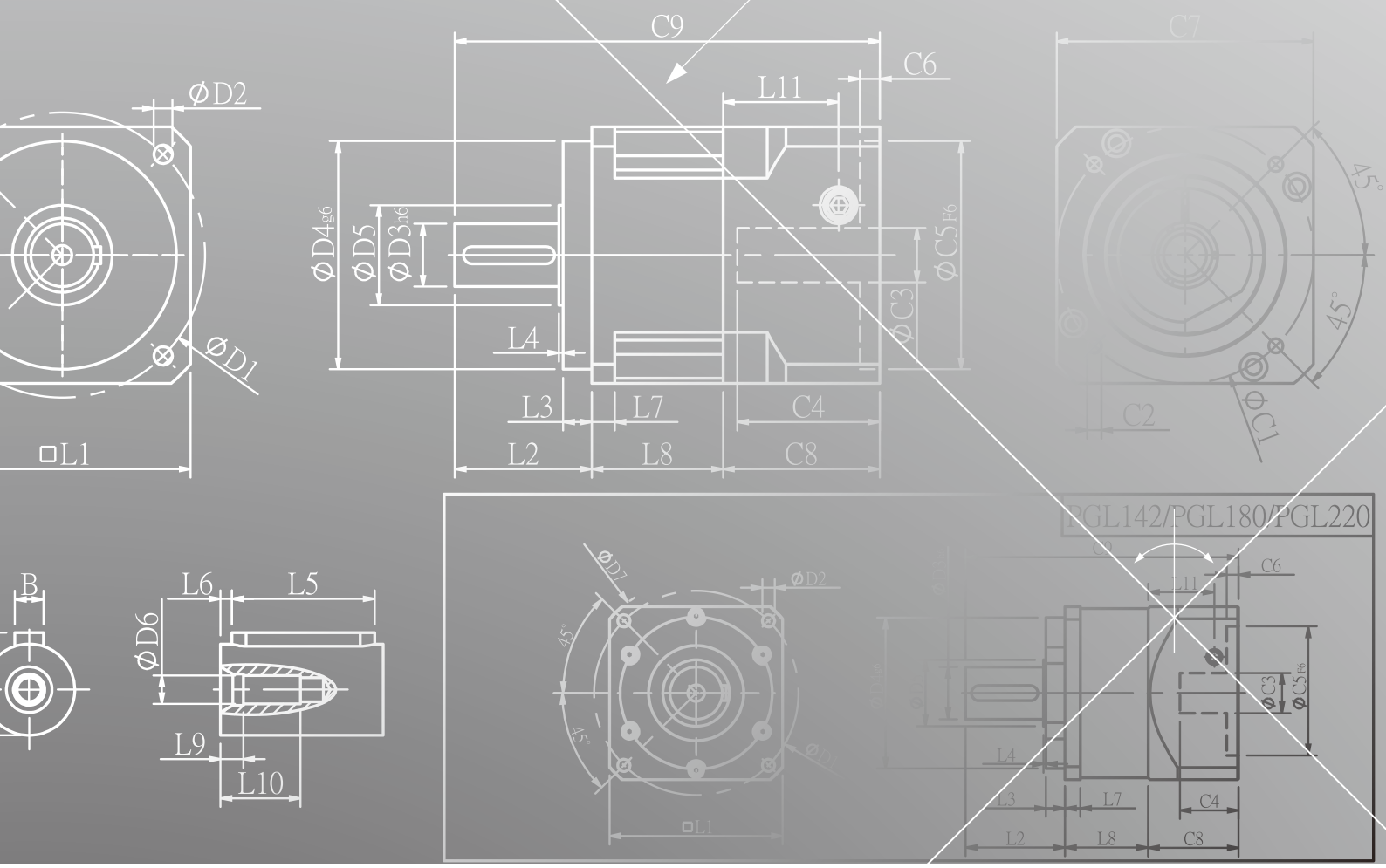
C9
C6
L11
C7
ØD2
ØD4g6
ØD5
ØD3h6
ØC5F6
ØC3
L4
L3
L7
C4
L2
L8
C8
ØD1
□L1
45°
45°
C2
ØC1
PGL142/PGL180/PGL220
B
L6
L5
ØD6
L9
L10
ØD7
ØD2
45°
45°
ØD1
□L1
C6
L11
ØC3
ØC5F6
L4
L3
L7
C4
L2
L8
C8

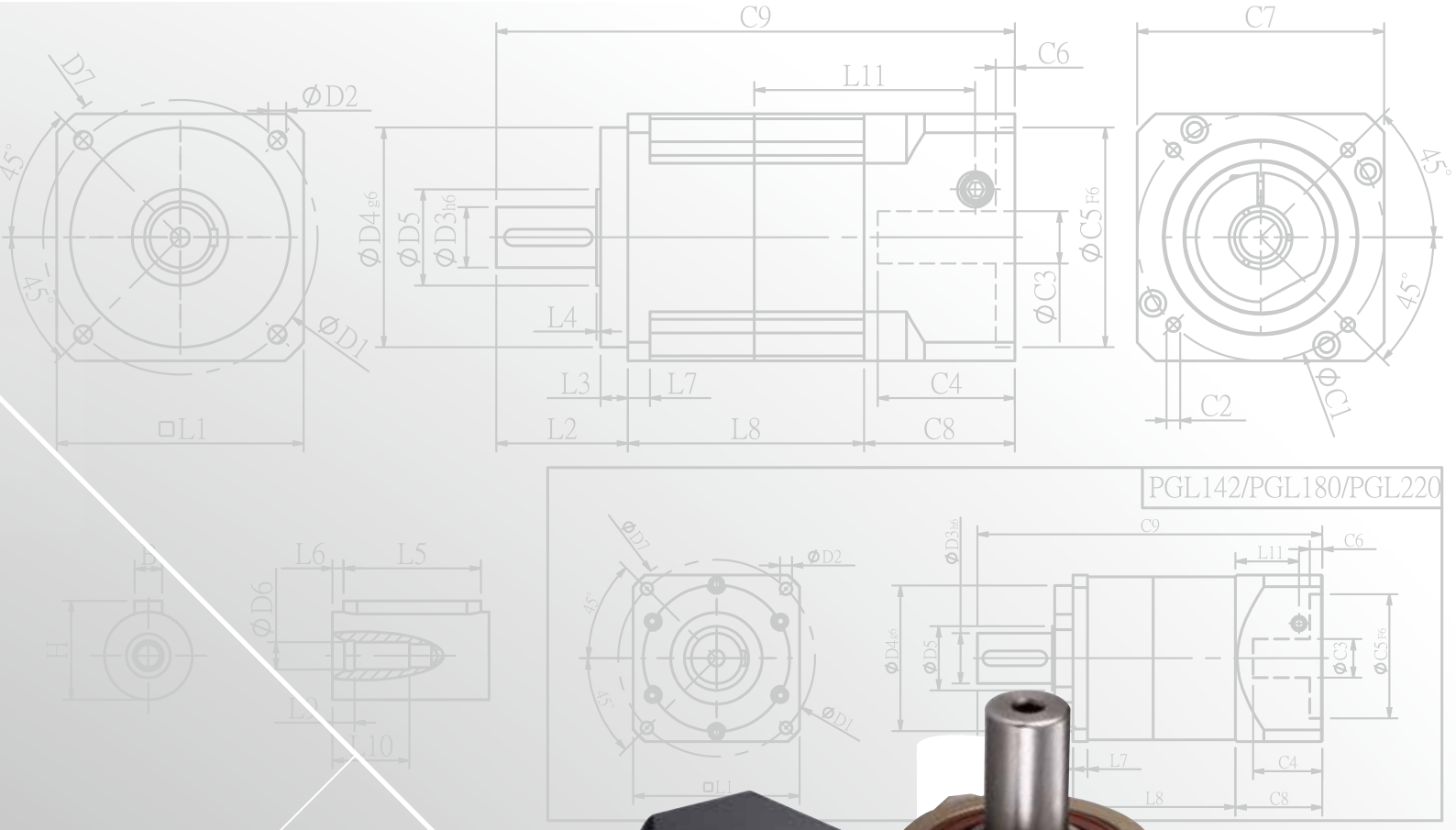
C9
C6
L11
C7
D7
ØD2
45°
ØD4g6
ØD5
ØD3h6
ØC5F6
ØC3
L4
ØD1
L3
L7
C4
C2
ØC1
□L1
L2
L8
C8
PGL142/PGL180/PGL220
L6
L5
ØD6
H
L10

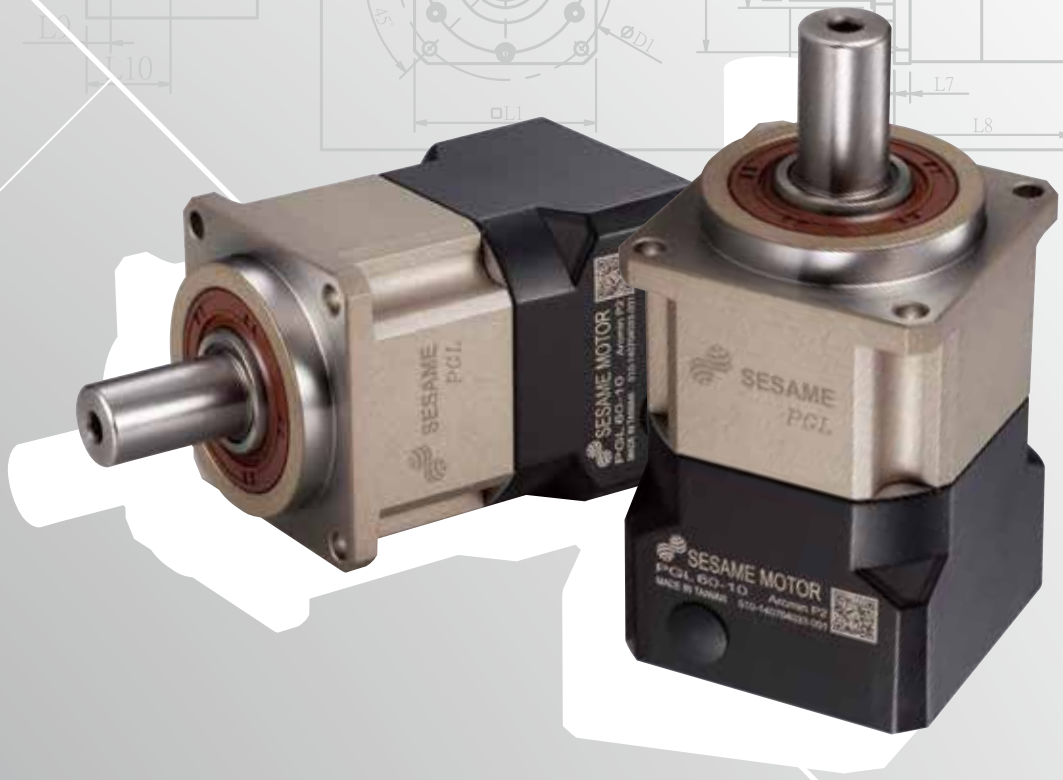
SESAME
PGL
SESAME MOTOR
PGL 60-10

PGL SERIES FEATURES PGL系列 產品特點

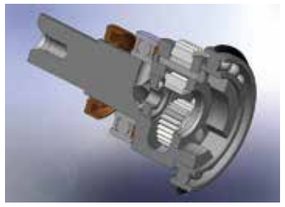

齒輪材質選用高級合金鋼，獨特熱處理至最佳硬度，並經過齒型研磨加工，以獲得最佳的精度、高耐磨耗及高耐衝擊韌性。
Alloy steel gear with unique heat treatment. Additionally, with gear grinding processing to get the best accuracy, high wear resistance and high impact toughness.

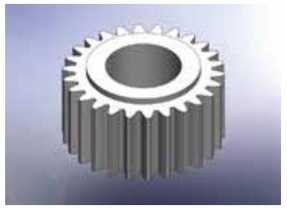

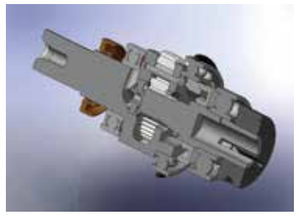

太陽齒前端軸承直接置入於行星固定架內，整體機械結構設計，以確保傳動元件的同心度。
The sun gear bearing is placed directly into the planetary arm bracket, the overall mechanical structure designed to ensure concentricity of the transmission components.

行星固定架及出力軸設計一體成型，且前後培林設定位置為大跨距，可達到最大扭轉剛性及出力軸高徑向負載能力。
Planetary arm bracket and output shaft are one-piece constructed, setting bearing apart for larger span to reach the largest reverse rigid and contribute high axis radial load capacity.

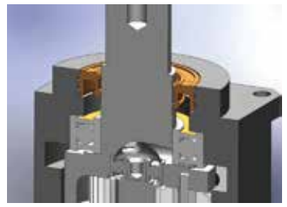

高科技油封設計上唇為防塵唇，下唇為防油唇。採IP65防護等級的密封設計，採用高級潤滑油脂，不洩漏、免保養。
High-tech oil seal design on the upper lip guard against dust intruder, lower lip to guard against oil leak. Advanced lubricants grease and IP65 protection safeguards fully avoid leaking and given it maintenance-free.

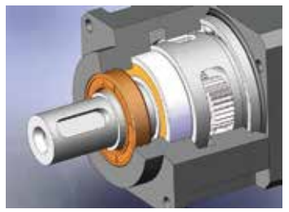

出力軸表面 與油封搭配確保最低磨擦係數和減少啓動負載，保持最佳密封性，延長使用壽命。
Grinding process to smooth surface of output shaft, and with oil-seal to minimum friction coefficient and reducing start up load; result in the best seal-ability and extended lifespan.

PGL 系列整體設計上可容許伺服馬達高轉速的輸入，達到最大扭力輸出。精密齒輪設計及專業齒輪加工，製造出低運轉背隙、高效率、低噪音及長壽命的行星減速機。
PGL Series overall design suitable for combination operation with servo motor high-speed input and achieves maximum torque output. Precision gear design and gear processing, create a low backlash operation, high efficiency, low noise and long-life of the planetary gear.

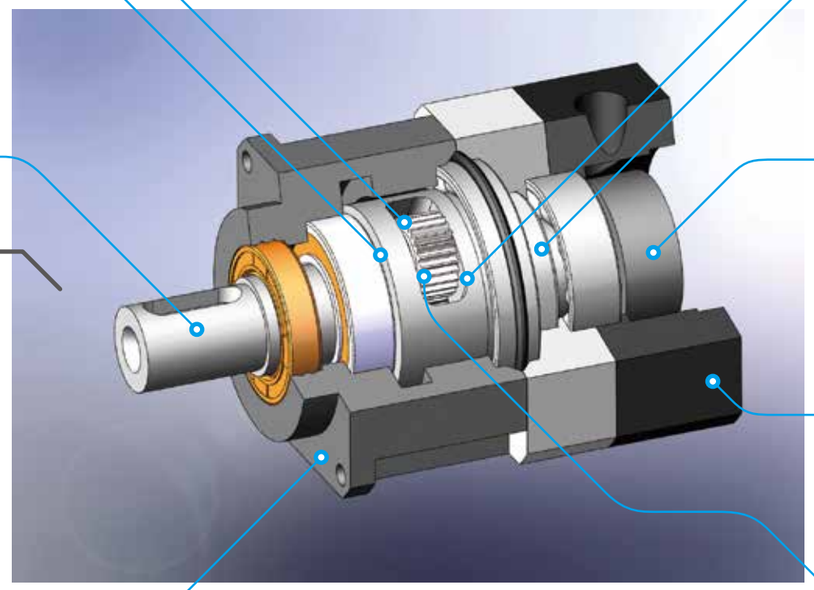

輸入端與馬達入力軸連結方法採用拴緊式機構，鎖緊環經過動平衡分析，確保高轉速下，結合介面的同心度及零滑差動力傳遞。
Input-end and motor shaft are coupled through a dynamic balanced collar clamping mechanism to ensure connection interface concentricity and zero slip power transmission at high speed.

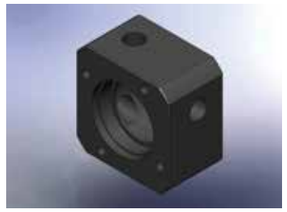

先進馬達連接板設計，配合入力軸襯套，安裝容易，可與各種廠牌之伺服、步進馬達完美搭配組合。
Advanced motor bracket design coupled with the input shaft bushing is easy to mount to any servo or stepper motor.

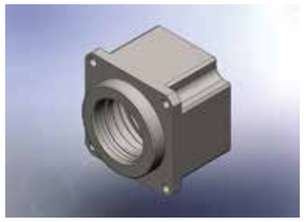

先進無電解鎳表面處理，耐刮，耐腐蝕，最適合高科技設備嚴苛要求。
本體齒箱與內環齒一體鍛造成形，再經德國頂級插齒機加工。具有高精密度，高扭力，耐磨耗等特點。
Advanced electroless nickel plating surface treatment resists scratch and corrosion. Suitable for stringent require of high-tech equipment.
The gear box and internal gear ring are one-piece constructed, and then processed with advanced Germany gear shaper machinery for high-precision, high torque and abrade consumption.

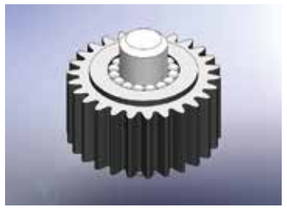

行星齒輪傳動介面採用針狀軸承，滿針排列不含保持器，以達到最大接觸面積最小間隙公差，提高結構剛性及輸出扭力。
Planet gear transmission interface equipped with needle bearings, full needle roller bearings aligned without retainer achieve maximum exposure but smallest gap tolerances. Enhance over-all gear structure rigid and output torque.

PGL Single Stage Dimensions PGL單段外型尺寸圖

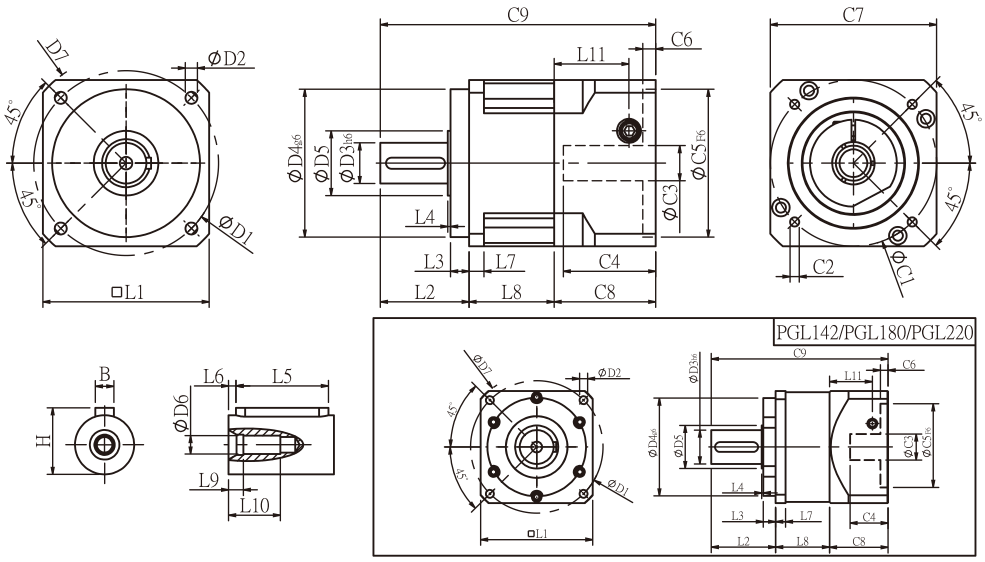

Specifications 規格

Unit:mm

尺寸 Dimensions	PGL42	PGL60	PGL90	PGL115	PGL142	PGL180	PGL220
D1	50	70	100	130	165	215	250
D2	3.4	5.5	6.5	8.5	10.5	13	17
D3 h6	13	16	22	32	40	55	75
D4 g6	35	50	80	110	130	160	180
D5	15	25	35	45	50	70	90
D6	M4x0.7P	M5x0.8P	M8x1.25P	M12x1.75P	M16x2.0P	M20x2.5P	M20x2.5P
D7	56	80	118	148	186	239	292
L1	42.6	60	90	115	142	182	220
L2	26	37	48	62	93	104.5	138
L3	5.5	7	10	8	8	20	30
L4	1.5	1.5	1.5	3	6	2.5	3
L5	15	25	32	40	60	70	90
L6	2	2	3	5	5	6	7
L7	4	6	8	12	18	16	20
L8	28.3	36	46	59	79	87.5	117.5
L9	4	4	4.5	6	6	8	7
L10	14	16.5	20.5	30	38	48	42
L11	29	35.5	40.5	42	63	69.5	102.2
C1 [2]	46	70	90	115	145	200	235
C2 [2]	M4x0.7P	M5x0.8P	M6x1.0P	M8x1.25P	M8x1.25P	M12x1.75P	M12x1.75P
C3 [2]	≦8	≦14	≦19/≦24	≦24/≦28	≦35	≦50	≦55
C4 [2]	27	37	47	58	66	82	98
C5 [2] F6	30	50	70	95	110	114.3	200
C6 [2]	4	4	6	10	6	13	12
C7 [2]	42.6	60	90	115	140	182	220
C8 [2]	38.5	46	55	63	80	95	130
C9 [2]	92.8	119	149	184	252	287	385.5
B	5	5	6	10	12	16	20
H	15	18	24.5	35	43	59	79.5

★ C1~C9是公製標準馬達連接板尺寸,請依所選用的馬達決定.

★ 本公司有權針對以上數據規格逕行設計變更不先行告知.

★ C1~C9 are motor specific dimensions(metric std shown), Size may vary according to the motor flange chosen.

★ Specification subject to change without notice.

PGL Double Stage Dimensions-1 PGL雙段外型尺寸圖-1

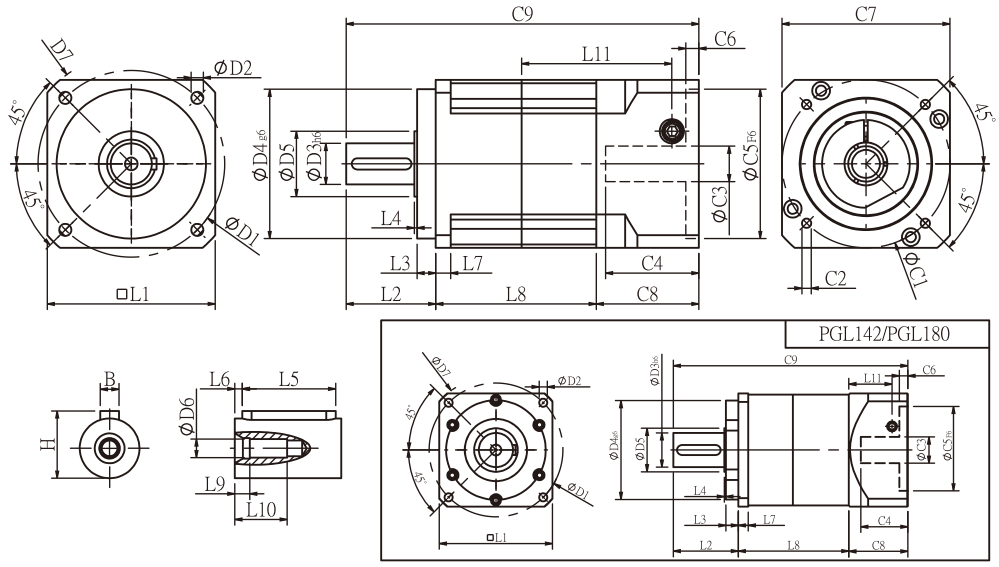

Specifications 規格

Unit:mm

尺寸 Dimensions	PGL42	PGL60	PGL90	PGL115	PGL142	PGL180
D1	50	70	100	130	165	215
D2	3.4	5.5	6.5	8.5	10.5	13
D3 h6	13	16	22	32	40	55
D4 g6	35	50	80	110	130	160
D5	15	25	35	45	50	70
D6	M4x0.7P	M5x0.8P	M8x1.25P	M12x1.75P	M16x2.0P	M20x2.5P
D7	56	80	118	148	186	239
L1	42.6	60	90	115	142	182
L2	26	37	48	62	93	104.5
L3	5.5	7	10	8	8	20
L4	1.5	1.5	1.5	3	6	2.5
L5	15	25	32	40	60	70
L6	2	2	3	5	5	6
L7	4	6	8	12	18	16
L8	54.3	64	86	107	140	177.5
L9	4	4	4.5	6	6	8
L10	14	16.5	20.5	30	38	48
L11	29	35.5	40.5	42	63	69.5
C1 [2]	46	70	90	115	145	200
C2 [2]	M4x0.7P	M5x0.8P	M6x1.0P	M8x1.25P	M8x1.25P	M12x1.75P
C3 [2]	≦8	≦14	≦19/≦24	≦24/≦28	≦35	≦50
C4 [2]	27	37	47	58	66	82
C5 [2] F6	30	50	70	95	110	114.3
C6 [2]	4	4	6	10	6	13
C7 [2]	42.6	60	90	115	140	182
C8 [2]	38.5	46	55	63	80	95
C9 [2]	118.8	147	189	232	313	377
B	5	5	6	10	12	16
H	15	18	24.5	35	43	59

★ C1~C9是公製標準馬達連接板尺寸,請依所選用的馬達決定.

★ 本公司有權針對以上數據規格逕行設計變更不先行告知.

★ C1~C9 are motor specific dimensions(metric std shown), Size may vary according to the motor flange chosen.

★ Specification subject to change without notice.

PGL Double Stage Dimensions-2 PGL雙段外型尺寸圖-2

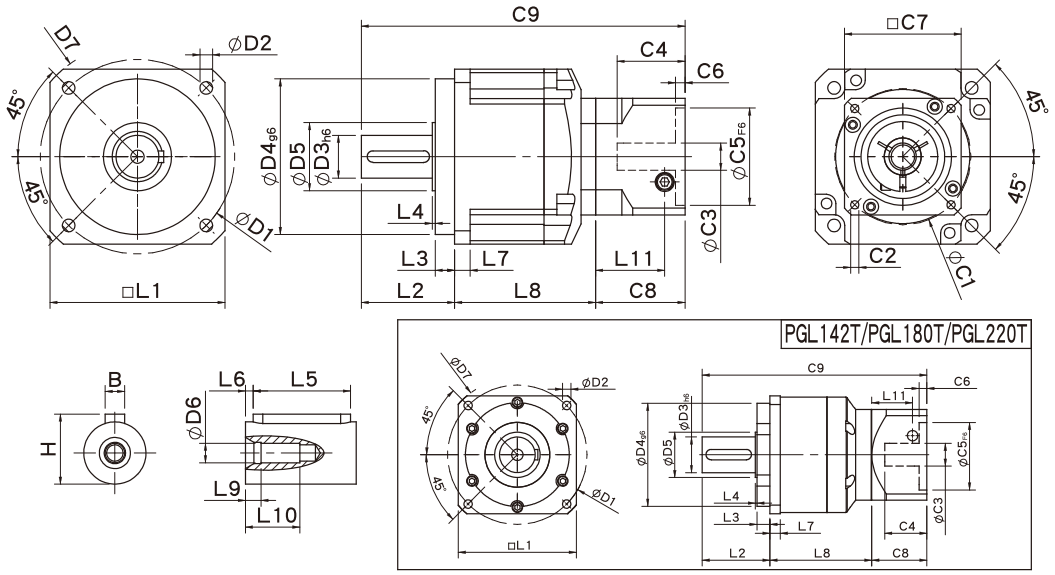

Specifications 規格

Unit:mm

尺寸 Dimensions	PGL60T	PGL90T	PGL115T	PGL142T	PGL180T	PGL220T
D1	70	100	130	165	215	250
D2	5.5	6.5	8.5	10.5	13	17
D3 h6	16	22	32	40	55	75
D4 g6	50	80	110	130	160	180
D5	25	35	45	50	70	90
D6	M5x0.8P	M8x1.25P	M12x1.75P	M16x2.0P	M20x2.5P	M20x2.5P
D7	80	118	148	186	239	292
L1	60	90	115	142	182	220
L2	37	48	62	93	104.5	138
L3	7	10	8	8	20	30
L4	1.5	1.5	3	6	2.5	3
L5	25	32	40	60	70	90
L6	2	3	5	5	6	7
L7	6	8	12	18	16	20
L8	58.8	72.5	97.4	127	157	199.5
L9	4	4.5	6	6	8	7
L10	16.5	20.5	30	38	48	42
L11	29	35.5	40.5	42	63	69.5
C1 [2]	46	70	90	115	145	200
C2 [2]	M4x0.7P	M5x0.8P	M6x1.0P	M8x1.25P	M8x1.25P	M12x1.75P
C3 [2]	≦8	≦14	≦19/≦24	≦24/≦28	≦35	≦50
C4 [2]	27	37	47	58	66	82
C5 [2] F6	30	50	70	95	110	114.3
C6 [2]	4	4	6	10	6	13
C7 [2]	42.6	60	90	115	140	182
C8 [2]	38.5	46	55	63	80	95
C9 [2]	134.3	166.5	214.4	283	341.5	432.5
B	5	6	10	12	16	20
H	18	24.5	35	43	59	79.5

★ C1~C9是公製標準馬達連接板尺寸,請依所選用的馬達決定.

★ 本公司有權針對以上數據規格逕行設計變更不先行告知.

★ C1~C9 are motor specific dimensions(metric std shown), Size may vary according to the motor flange chosen.

★ Specification subject to change without notice.

PGL Specifications Table PGL性能規格共表

規格 Specifications		節數 Stage	減速比 Ratio	PGL-42	PGL-60	PGL-90	PGL-115	PGL-142	PGL-180	PGL-220
額定輸出力矩 T_{2N} Nominal Output Torque	N • m	1	3	13.8	44.2	95.2	283	482	1151	1670
			4	11.9	35.9	74.6	249	490	1055	1574
			5	13.8	43.0	95.2	283	473	1151	1670
			6	12.5	39.4	90.9	266	436	1055	1574
			7	11.9	36.0	85.6	219	400	1055	1574
			8	10.9	32.4	85.0	216	363	860	1184
			9	9.8	28.7	80.0	210	320	764	1185
			10	10.1	25.0	75.0	210	320	763	1184
		節數 Stage	減速比 Ratio	PGL-42	PGL-60 / 60T	PGL-90 / 90T	PGL-115 / 115T	PGL-142 / 142T	PGL-180 / 180T	PGL-220 / 220T
		2	15	13.8	44.2	95.2	283	482	1151	1670
			20	11.9	35.9	74.6	249	490	1055	1574
			25	13.8	43.0	95.2	283	473	1151	1670
			30	13.8	43.0	95.2	283	473	1151	1670
			35	13.8	43.0	95.2	283	473	1151	1670
			40	13.8	43.0	95.2	283	473	1151	1670
			45	13.8	43.0	95.2	283	473	1151	1670
			50	13.8	43.0	95.2	283	473	1151	1670
			60	12.5	39.4	90.9	266	436	1055	1574
			70	11.9	36.0	85.6	219	400	1055	1574
			80	10.9	32.4	85.0	216	363	860	1184
			90	9.8	28.7	80.0	210	320	764	1185
			100	10.1	25.0	75.0	210	320	763	1184
急停力矩 T_{2NOT} Emergency Stop Torque	N • m		3.0 倍額定輸出力矩 (3.0 times of Nominal Output Torque) (* 最大輸出力矩 Max. Output Torque T_{2B} =60% of Emergency Stop Torque)							
額定輸入轉速 n_{1N} Nominal Input Speed	rpm	1,2	3-100	3000	3000	3000	2500	2000	2000	2000
最大輸入轉速 n_{1max} Max. Input Speed	rpm	1,2	3-100	6000	6000	6000	5000	4000	4000	4000
超精密背隙 Micro Backlash P0	arcmin	1	3-10	-	-	-	≦3	≦3	≦3	≦3
		2	12-100	-	-	-	≦5	≦5	≦5	≦5
精密背隙 Precision Backlash P1	arcmin	1	3-10	-	≦6	≦6	≦5	≦5	≦5	≦5
		2	12-100	-	≦9	≦9	≦7	≦7	≦7	≦7
標準背隙 Standard Backlash P2	arcmin	1	3-10	≦12	≦9	≦9	≦7	≦7	≦7	≦7
		2	12-100	≦15	≦12	≦12	≦9	≦9	≦9	≦9
扭轉剛性Torsional Rigidity	N • m /arcmin	1,2	3-100	1.0	2.8	7.5	15.5	30	57	110
容許徑向力 F_{2rB} [1] Max. Radial Load	N	1,2	3-100	450	1200	2050	4250	7680	9080	13500
容許軸向力 F_{2aB} [1] Max. Axial Load	N	1,2	3-100	320	900	1420	2930	4680	5100	7300
使用溫度 Operating Temp.	°C		3-100	-10℃ ~ +90℃						
使用壽命Service Life	hr		3-100	20,000 (10,000/連續運轉 Continuous operation)						
效率 Efficiency	%	1	3-10	≧96%						
		2	12-100	≧92%						
重量 Weight	kg	1	3-10	0.6	1.2	3.2	7.5	15.6	26	56
		2	12-100	0.8	1.9/1.5	5.3/3.6	12/8.8	20.7/17.2	36/31	80/62
安裝方向 Mounting Position	-	1,2	3-100	任意方向 Any direction						
噪音值 Noise Level [2]	dBA/1m	1,2	3-100	60	62	65	65	70	70	75
防護等級 Protection Class	-	1,2	3-100	IP65						
潤滑 Lubrication	-	1,2	3-100	全合成潤滑油脂 Synthetic Lubricant						

減速機轉動慣量 Inertia(J1)

節數Stage	減速比Ratio	單位unit	PGL-42	PGL-60	PGL-90	PGL-115	PGL-142	PGL-180	PGL-220
1	3	Kg • cm^2	0.03	0.20	0.81	2.20	7.89	25.2	77.9
	4		0.02	0.16	0.65	1.80	5.83	19.8	56.5
	5		0.02	0.15	0.62	1.61	5.38	18.3	53.3
	6/7/8		0.02	0.14	0.60	1.55	5.22	17.8	53.0
	9/10		0.02	0.14	0.60	1.53	5.20	17.6	52.9
節數Stage	減速比Ratio		PGL-42	PGL-60(T)	PGL-90(T)	PGL-115(T)	PGL-142(T)	PGL-180(T)	PGL-220T
2	15/20/25		0.02	0.15(0.02)	0.62(0.15)	1.61(0.62)	5.38(1.61)	18.3(5.38)	53.9(18.3)
	30/35/40		0.02	0.14(0.02)	0.60(0.14)	1.55(0.60)	5.22(1.55)	17.8(5.22)	53.0(17.8)
	45/50/60/70/80/90/100		0.02	0.14(0.02)	0.60(0.14)	1.53(0.60)	5.20(1.53)	17.6(5.20)	52.9(17.6)

* 1. 輸出轉速 100rpm 時，作用於輸出軸中心位置。Applied to the output shaft center @100rpm.
* 2. 3000rpm 空載量測。Measured at 3000 rpm with no load. These values are measured by gearbox with ratio = 10 (1-stage) or ratio = 100 (2-stage) at nominal input speed or 3000 rpm (if nominal input speed is higher than 3000 rpm) with no load.

※本公司有權對以上數據規格逕行設計變更不先行告知。The above figures/specifications are subject to change without prior notice.

Products due to human error, natural disasters or other factors lead to poor or damaged, will not be covered under warranty.
產品因人為原因或天災等因素導致不良或損壞，不在保固範圍內。

PGC SERIES

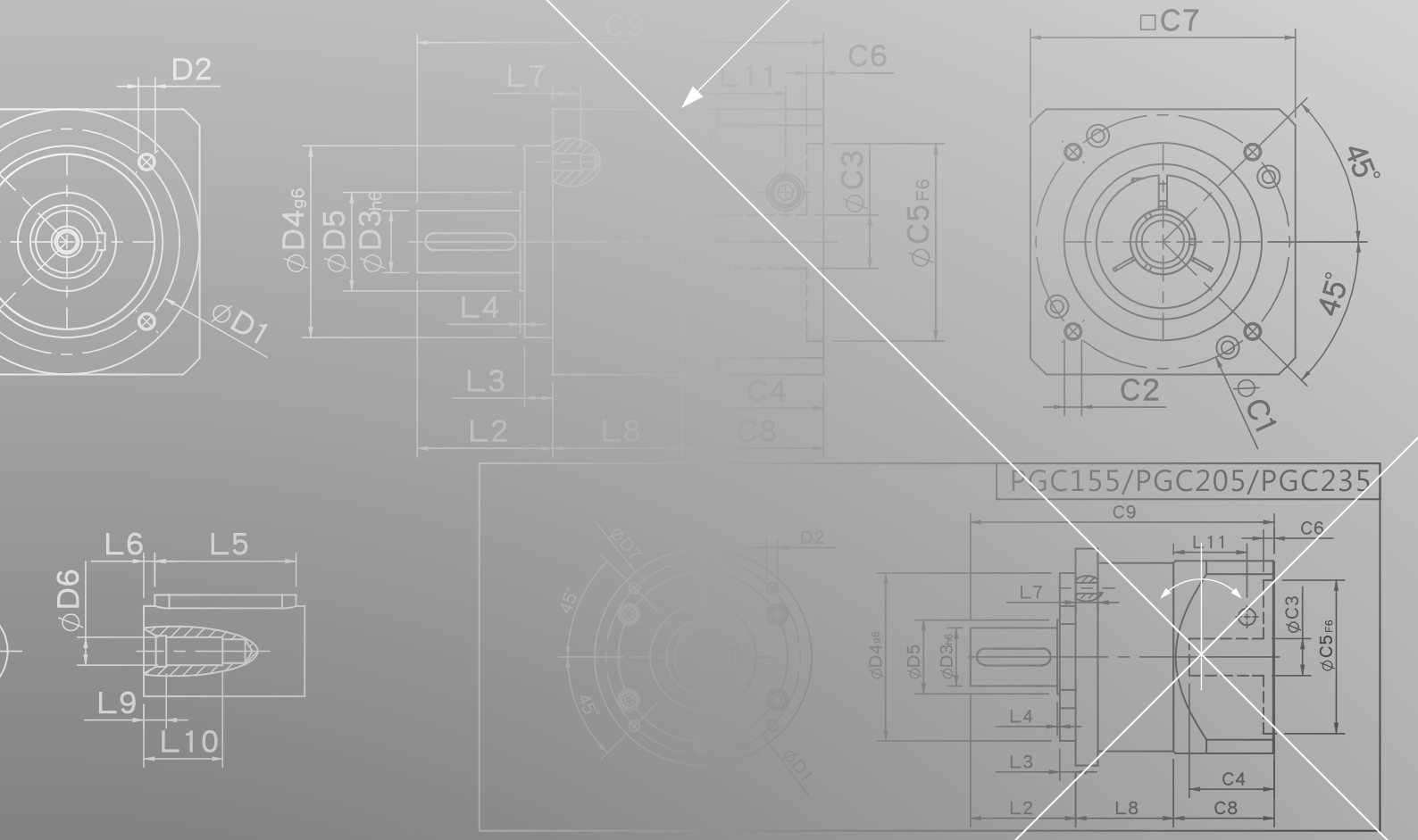
D2
ØD1
C9
L7
C6
L11
ØD4g6
ØD5
ØD3h6
ØC3
ØC5F6
L4
L3
L2
L8
C4
C8
□C7
45°
45°
C2
ØC1
L6
L5
ØD6
L9
L10
PGC155/PGC205/PGC235
C9
C6
L11
L7
ØD4g6
ØD5
ØD3h6
ØC3
ØC5F6
L4
L3
L2
L8
C4
C8
ØD7
D2
45°
45°
ØD1

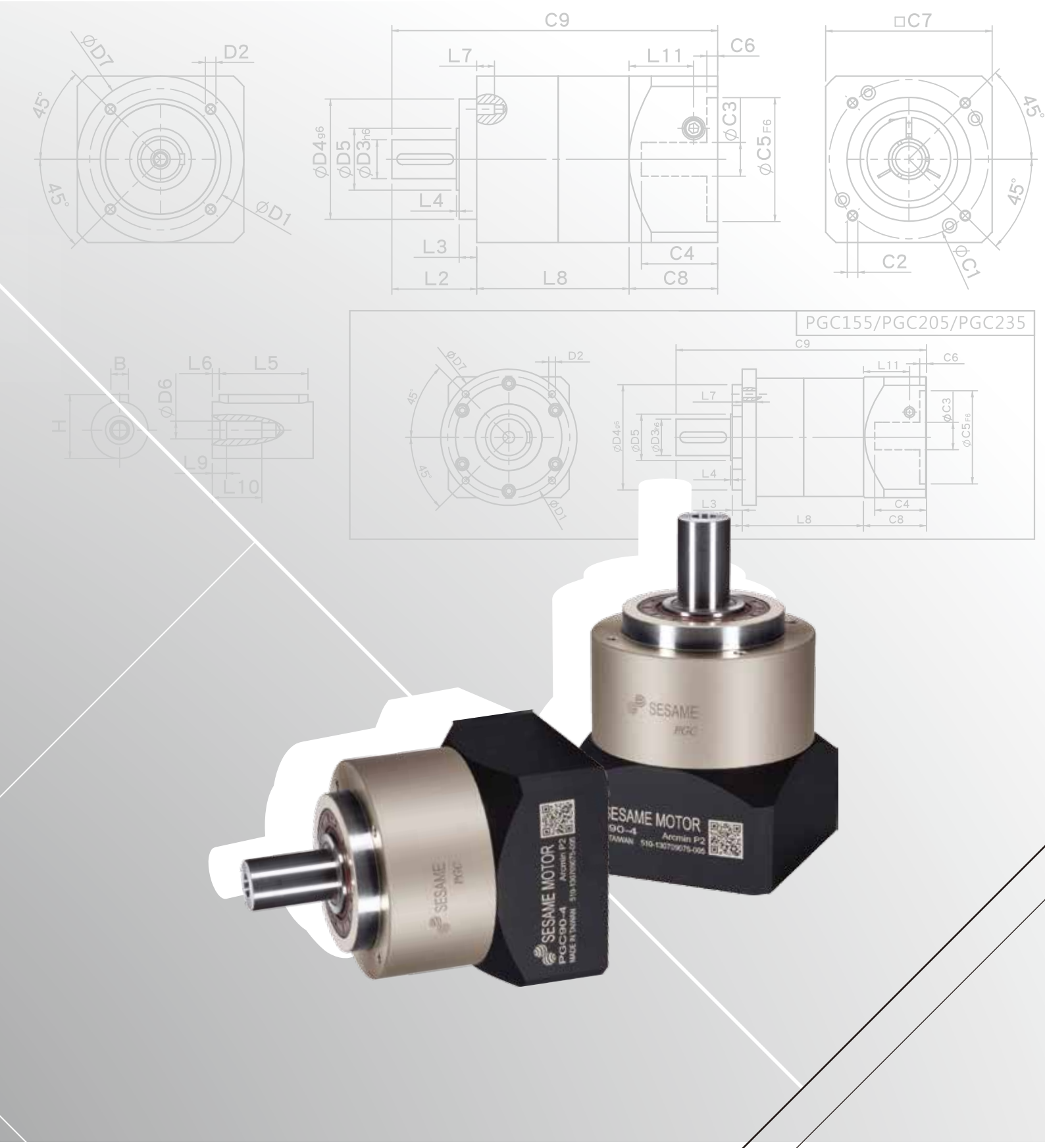
C9
□C7
ØD7
D2
L7
L11
C6
45°
ØD4g6
ØD5
ØD3h6
ØC3
ØC5F6
L4
ØD1
L3
C4
L2
L8
C8
C2
ØC1
PGC155/PGC205/PGC235
B
L6
L5
ØD6
H
L9
L10
SESAME
PGC
SESAME MOTOR
PGC90-4
Arcmin P2

PGC Single Stage Dimensions PGC單段外型尺寸圖

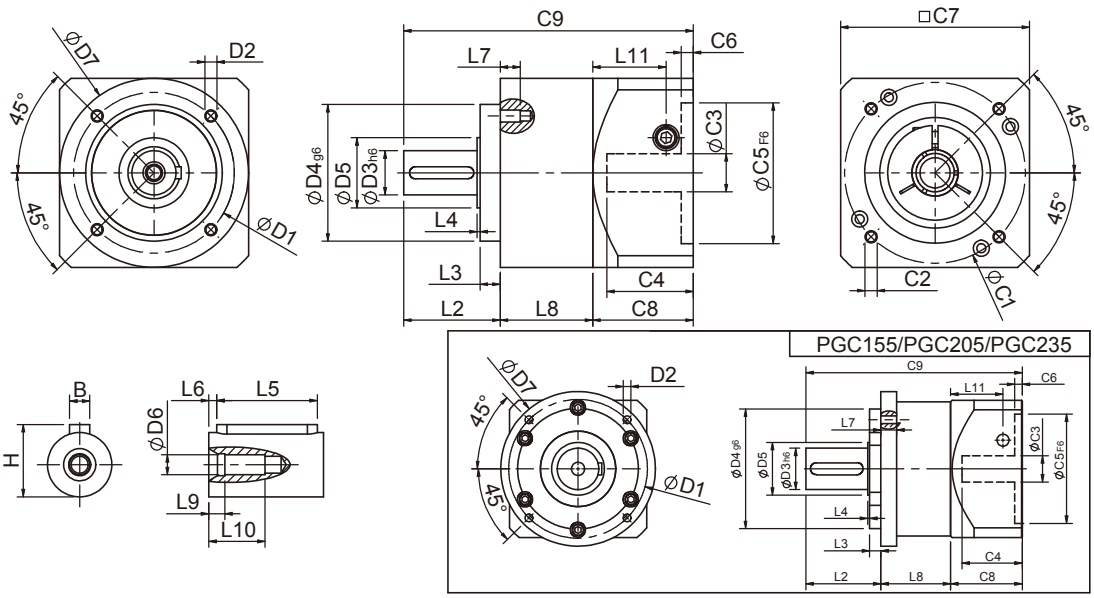

Specifications 規格

Unit:mm

尺寸 Dimensions	PGC50	PGC70	PGC90	PGC120	PGC155	PGC205	PGC235
D1	44	62	80	108	140	184	210
D2	M4x0.7P	M5x0.8P	M6x1.0P	M8x1.25P	M10x1.5P	M12x1.75P	M16x2.0P
D3 h6	13	16	22	32	40	55	75
D4 g6	35	52	68	90	120	160	180
D5	15	25	35	45	50	70	90
D6	M4x0.7P	M5x0.8P	M8x1.25P	M12x1.75P	M16x2.0P	M20x2.5P	M20x2.5P
D7	50	70	94	120	155	205	235
L2	24.5	35	48	60	93	99.5	126
L3	4	5	10	6	8	15	18
L4	1.5	1.5	1.5	3	6	2.5	3
L5	15	25	32	40	60	70	90
L6	2	2	3	5	5	6	7
L7	8	10	10	15	18	21	32
L8	30	38	46	61	79	92.5	129.5
L9	4	4	4.5	6	6	8	7
L10	14	16.5	20.5	30	38	48	42
L11	24.4	31.5	36.5	42	63	69.5	102.2
C1 [2]	46	70	90	115	145	200	235
C2 [2]	M4x0.7P	M5x0.8P	M6x1.0P	M8x1.25P	M8x1.25P	M12x1.75P	M12x1.75P
C3 [2]	≦8	≦14	≦19/≦24	≦24/≦28	≦35	≦50	≦55
C4 [2]	27	35	43	58	66	82	98
C5 [2] F6	30	50	70	95	110	114.3	200
C6 [2]	4	5	5	8	6	13	12
C7 [2]	50	70	94	120	140	182	220
C8 [2]	38.5	46	55	63	80	95	130
C9 [2]	93	119	149	184	252	287	385.5
B	5	5	6	10	12	16	20
H	15	18	24.5	35	43	59	79.5

★ C1~C9是公製標準馬達連接板尺寸,請依所選用的馬達決定.

★ 本公司有權針對以上數據規格逕行設計變更不先行告知.

★ C1~C9 are motor specific dimensions(metric std shown), Size may vary according to the motor flange chosen.

★ Specification subject to change without notice.

PGC Double Stage Dimensions-1 PGC雙段外型尺寸圖-1

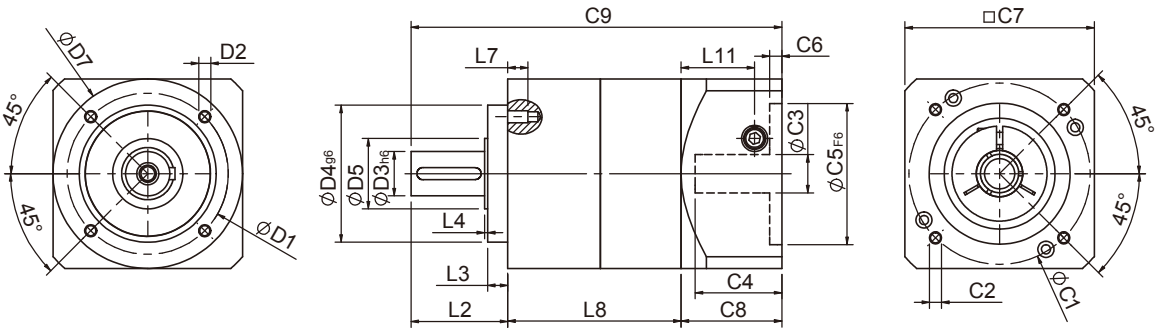

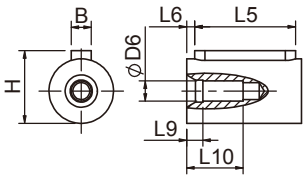

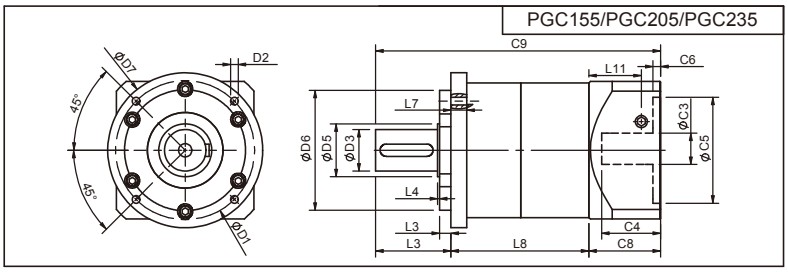

Specifications 規格

Unit:mm

尺寸 Dimensions	PGC50	PGC70	PGC90	PGC120	PGC155	PGC205	PGC235
D1	44	62	80	108	140	184	210
D2	M4x0.7P	M5x0.8P	M6x1.0P	M8x1.25P	M10x1.5P	M12x1.75P	M16x2.0P
D3h6	12	16	22	32	40	55	75
D4g6	35	52	68	90	120	160	180
D5	15	25	35	45	50	70	90
D6	M4x0.7P	M5x0.8P	M8x1.25P	M12x1.75P	M16x2.0P	M20x2.5P	M20x2.5P
D7	50	70	94	120	155	205	235
L2	24.5	35	48	60	93	99.5	126
L3	4	5	10	6	8	15	18
L4	1.5	1.5	1.5	3	6	2.5	3
L5	15	25	32	40	60	70	90
L6	2	2	3	5	5	6	7
L7	8	10	10	15	18	21	32
L8	56	66	86	109	140	182.5	244
L9	4	4	4.5	6	6	8	7
L10	14	16.5	20.5	30	38	48	42
L11	24.4	31.5	36.5	42	63	69.5	102.2
C1 [2]	46	70	90	115	145	200	235
C2 [2]	M4x0.7P	M5x0.8P	M6x1.0P	M8x1.25P	M8x1.25P	M12x1.75P	M12x1.75P
C3 [2]	≦8	≦14	≦19/≦24	≦24/≦28	≦35	≦50	≦55
C4 [2]	27	35	43	58	66	82	98
C5 [2] F6	30	50	70	95	110	114.3	200
C6 [2]	4	5	5	8	6	13	12
C7 [2]	50	70	94	120	140	182	220
C8 [2]	34	44	50	63	80	95	130
C9 [2]	114.5	145	184	232	313	377	500
B	5	5	6	10	12	16	20
H	15	18	24.5	35	43	59	79.5

★ C1~C9是公製標準馬達連接板尺寸,請依所選用的馬達決定.

★ 本公司有權針對以上數據規格逕行設計變更不先行告知.

★ C1~C9 are motor specific dimensions(metric std shown), Size may vary according to the motor flange chosen.

★ Specification subject to change without notice.

PGC Double Stage Dimensions-2 PGC雙段外型尺寸圖-2

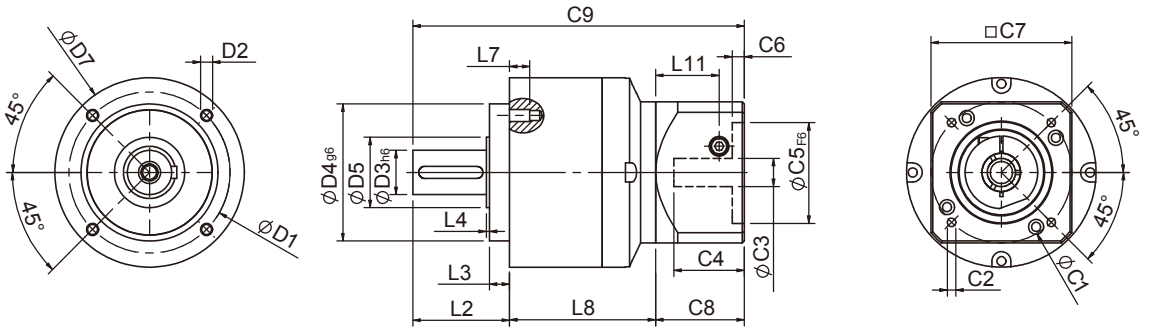

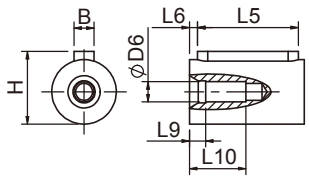

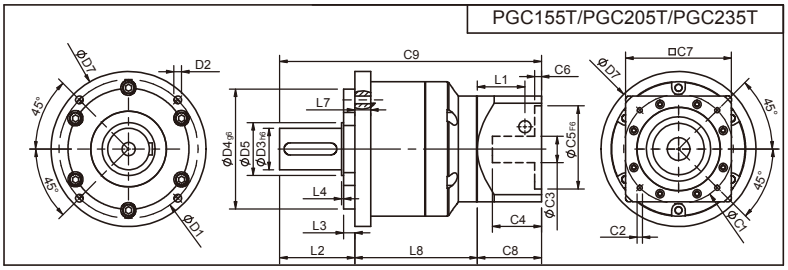

Specifications 規格

Unit:mm

尺寸 Dimensions	PGC70T	PGC90T	PGC120T	PGC155T	PGC205T	PGC235T
D1	62	80	108	140	184	210
D2	M5x0.8P	M6x1.0P	M8x1.25P	M10x1.5P	M12x1.75P	M16x2.0P
D3h6	16	22	32	40	55	75
D4g6	52	68	90	120	160	180
D5	25	35	45	50	70	90
D6	M5x0.8P	M8x1.25P	M12x1.75P	M16x2.0P	M20x2.5P	M20x2.5P
D7	70	94	120	155	205	235
L2	35	48	60	93	99.5	126
L3	5	10	6	8	15	18
L4	1.5	1.5	3	6	2.5	3
L5	25	32	40	60	70	90
L6	2	3	5	5	6	7
L7	10	10	15	18	21	32
L8	60.8	72.5	99.4	127	162	211.5
L9	4	4.5	6	6	8	7
L10	16.5	20.5	30	38	48	42
L11	29	35.5	40.5	42	63	69.5
C1 [2]	46	70	90	115	145	200
C2 [2]	M4x0.7P	M5x0.8P	M6x1.0P	M8x1.25P	M8x1.25P	M12x1.75P
C3 [2]	≦8	≦14	≦19/≦24	≦24/≦28	≦35	≦50
C4 [2]	28.5	41	47.75	58	66	82
C5 [2]F6	30	50	70	95	110	114.3
C6 [2]	5.5	8	6	8	6	13
C7 [2]	50	70	94	120	140	182
C8 [2]	40	50	55	63	80	95
C9 [2]	135.8	170.5	214.4	283	341.5	432.5
B	5	6	10	12	16	20
H	18	24.5	35	a43	59	79.5

★ C1~C9是公製標準馬達連接板尺寸,請依所選用的馬達決定.

★ 本公司有權針對以上數據規格逕行設計變更不先行告知.

★ C1~C9 are motor specific dimensions(metric std shown), Size may vary according to the motor flange chosen.

★ Specification subject to change without notice.

PGC Specifications Table PGC性能規格共表

規格 Specifications		節數 Stage	減速比 Ratio	PGC-50	PGC-70	PGC-90	PGC-120	PGC-155	PGC-205	PGC-235
額定輸出力矩 T_{2N} Nominal Output Torque	N • m	1	3	13.8	44.2	95.2	283	482	1151	1670
			4	11.9	35.9	74.6	249	490	1055	1574
			5	13.8	43.0	95.2	283	473	1151	1670
			7	11.9	36.0	85.6	219	400	1055	1574
			10	10.1	25.0	75.0	210	320	763	1184
		節數 Stage	減速比 Ratio	PGC-50	PGC-70(T)	PGC-90(T)	PGC-120(T)	PGC-155(T)	PGC-205(T)	PGC-235T
		2	15	13.8	44.2	95.2	283	482	1151	1670
			20	11.9	35.9	74.6	249	490	1055	1574
			25	13.8	43.0	95.2	283	473	1151	1670
			30	13.8	43.0	95.2	283	473	1151	1670
			35	13.8	43.0	95.2	283	473	1151	1670
			40	13.8	43.0	95.2	283	473	1151	1670
			50	13.8	43.0	95.2	283	473	1151	1670
			70	11.9	36.0	85.6	219	400	1055	1574
			100	10.1	25.0	75.0	210	320	763	1184
急停力矩 T_{2NOT} Emergency Stop Torque	N • m		3.0 倍額定輸出力矩 (3.0 times of Nominal Output Torque) (* 最大輸出力矩 Max. Output Torque T_{2B} =60% of Emergency Stop Torque)							
額定輸入轉速 n_{1N} Nominal Input Speed	rpm	1,2	3-100	3000	3000	3000	2500	2000	2000	2000
最大輸入轉速 n_{1max} Max. Input Speed	rpm	1,2	3-100	6000	6000	6000	5000	4000	4000	4000
超精密背隙 Micro Backlash P0	arcmin	1	3-10	-	-	-	≦3	≦3	≦3	≦3
		2	12-100	-	-	-	≦5	≦5	≦5	≦5
精密背隙 Precision Backlash P1	arcmin	1	3-10	-	≦6	≦6	≦5	≦5	≦5	≦5
		2	12-100	-	≦9	≦9	≦7	≦7	≦7	≦7
標準背隙 Standard Backlash P2	arcmin	1	3-10	≦12	≦9	≦9	≦7	≦7	≦7	≦7
		2	12-100	≦15	≦12	≦12	≦9	≦9	≦9	≦9
扭轉剛性Torsional Rigidity	N • m /arcmin	1,2	3-100	1.0	2.8	7.5	15.5	30	57	110
容許徑向力 F_{2rB} [1] Max. Radial Load	N	1,2	3-100	450	1200	2050	4250	7680	9080	13500
容許軸向力 F_{2aB} [1] Max. Axial Load	N	1,2	3-100	320	900	1420	2930	4680	5100	7300
使用溫度 Operating Temp.	°C		3-100	-10 °C ~+90 °C						
使用壽命Service Life	hr		3-100	20,000 (10,000/ 連續運轉 Continuous operation)						
效率 Efficiency	%	1	3-10	≧96%						
		2	12-100	≧92%						
重量 Weight	kg	1	3-10	0.7	1.4	3.0	7.3	15.6	26	56
		2	12-100	0.9	2.2(1.7)	5.0(3.4)	11.5(8.5)	20.7(17.2)	36(31)	80(62)
安裝方向 Mounting Position	-	1,2	3-100	任意方向Any direction						
噪音值 Noise Level [2]	dBA/1m	1,2	3-100	60	62	65	65	70	70	75
防護等級 Protection Class	-	1,2	3-100	IP65						
潤滑 Lubrication	-	1,2	3-100	全合成潤滑油脂 Synthetic Lubricant						

減速機轉動慣量 Inertia(J1)

節數Stage	減速比Ratio	單位unit	PGC-50	PGC-70	PGC-90	PGC-120	PGC-155	PGC-205	PGC-235
1	3	Kg • cm^2	0.03	0.20	0.81	2.20	7.89	25.2	77.9
	4		0.02	0.16	0.65	1.80	5.83	19.8	56.5
	5		0.02	0.15	0.62	1.61	5.38	18.3	53.3
	7		0.02	0.14	0.60	1.55	5.22	17.8	53.0
	10		0.02	0.14	0.60	1.53	5.20	17.6	52.9
節數Stage	減速比Ratio		PGC-50	PGC-70(T)	PGC-90(T)	PGC-120(T)	PGC-155(T)	PGC-205(T)	PGC-235T
2	15/20/25		0.02	0.15(0.02)	0.62(0.15)	1.61(0.62)	5.38(1.61)	18.3(5.38)	53.9(18.3)
	30/35/40		0.02	0.14(0.02)	0.60(0.14)	1.55(0.60)	5.22(1.55)	17.8(5.22)	53.0(17.8)
	50/70/100		0.02	0.14(0.02)	0.60(0.14)	1.53(0.60)	5.20(1.53)	17.6(5.20)	52.9(17.6)

* 1. 輸出轉速 100rpm 時，作用於輸出軸中心位置。Applied to the output shaft center @100rpm.
* 2. 3000rpm 空載量測。Measured at 3000 rpm with no load. These values are measured by gearbox with ratio = 10 (1-stage) or ratio = 100 (2-stage) at nominal input speed or 3000 rpm (if nominal input speed is higher than 3000 rpm) with no load.

※本公司有權對以上數據規格逕行設計變更不先行告知。The above figures/specifications are subject to change without prior notice.

Products due to human error, natural disasters or other factors lead to poor or damaged, will not be covered under warranty.
產品因人為原因或天災等因素導致不良或損壞，不在保固範圍內。

PGE SERIES

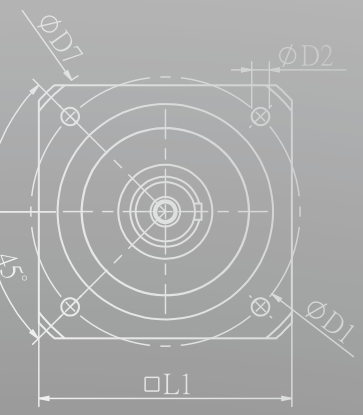
ØD7
ØD2
45°
ØD1
□L1

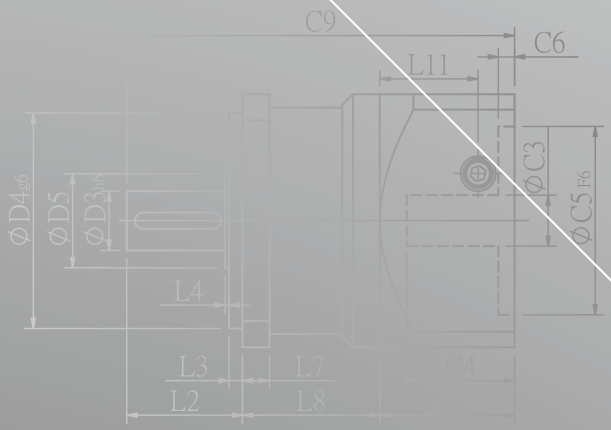
C9
C6
L11
ØD4
ØD5
ØD3
ØC3
ØC5
L4
L3
L7
L2
L8
C4

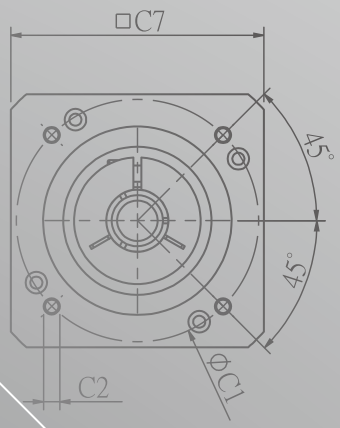
□C7
45°
45°
ØC1
C2

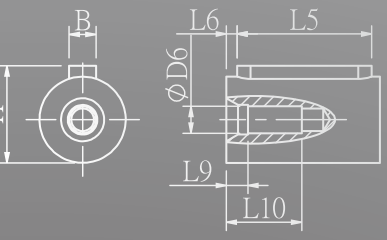
B
L6
L5
ØD6
L9
L10

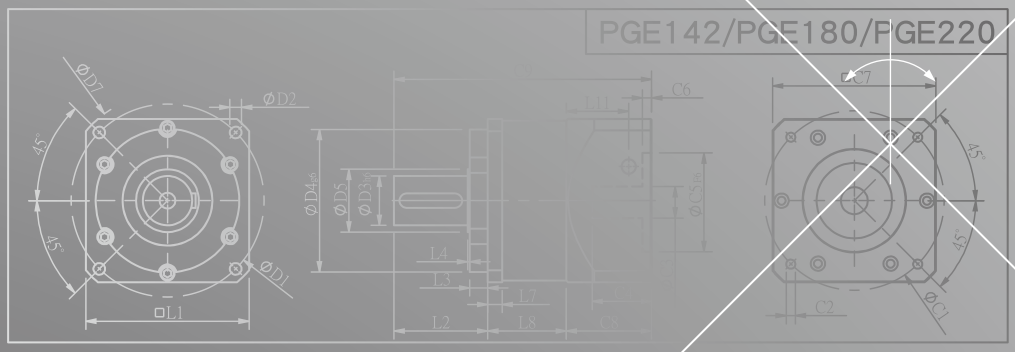
PGE142/PGE180/PGE220
ØD7
ØD2
45°
45°
ØD1
□L1
ØD4
ØD5
ØD3
ØC5
L4
L3
L7
L2
L8
C6
L11
□C7
45°
45°
ØC1
C2

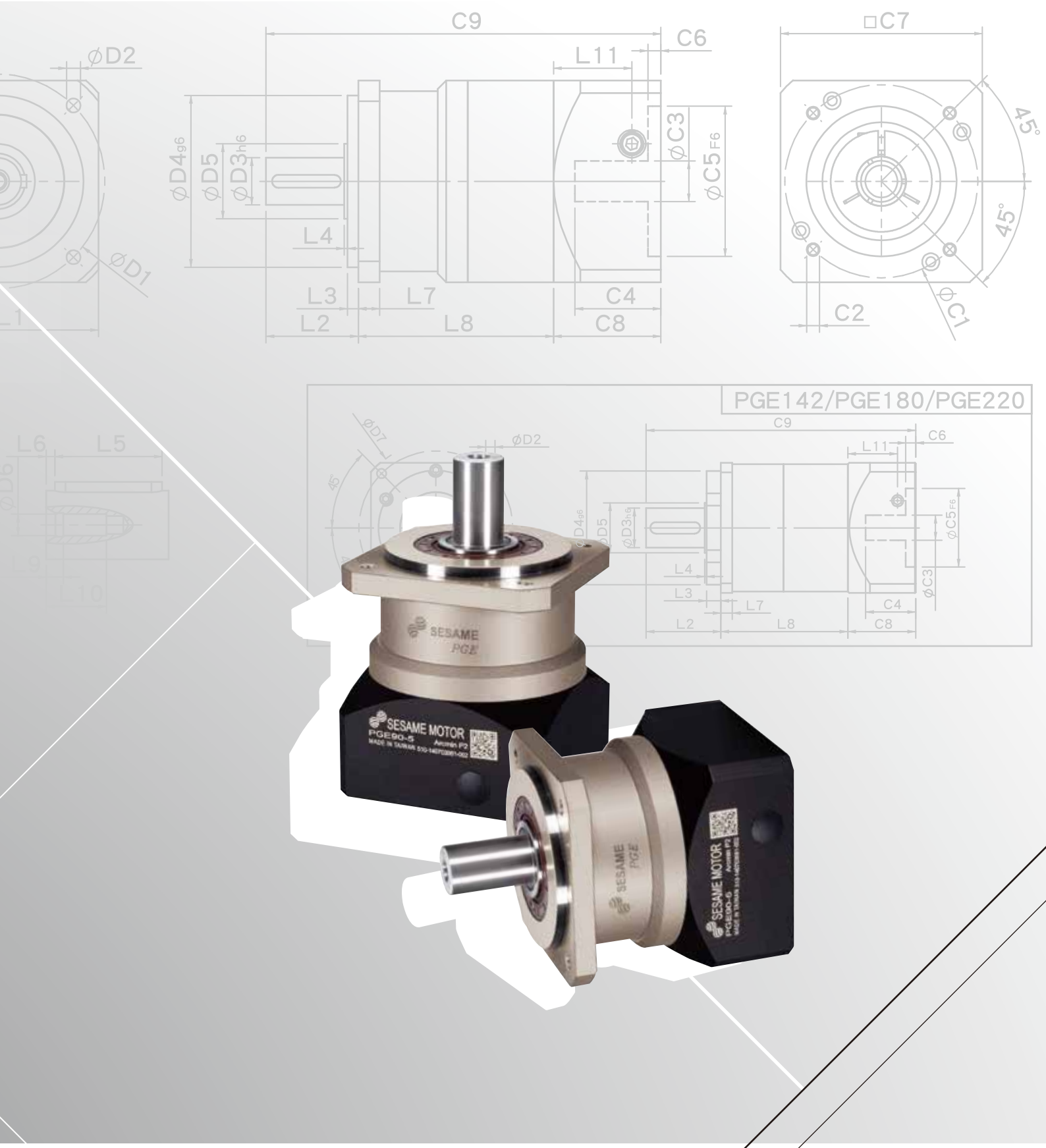
C9
C6
L11
□C7
ØD2
ØD4g6
ØD5
ØD3h6
ØC3
ØC5F6
45°
45°
L4
ØD1
L3
L7
C4
L2
L8
C8
C2
ØC1
PGE142/PGE180/PGE220
ØD7
ØD2
45
L6
L5
ØD6
L9
L10
SESAME
PGE
SESAME MOTOR
PGE90-5

PGE Single Stage Dimensions PGE單段外型尺寸圖

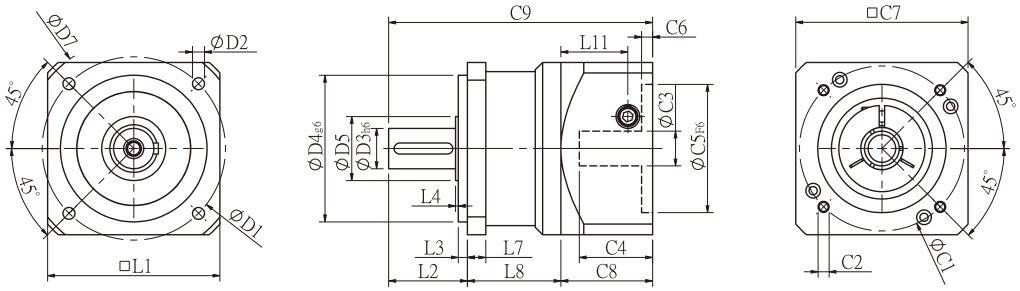

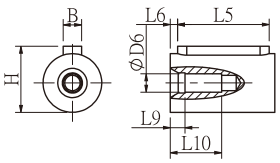

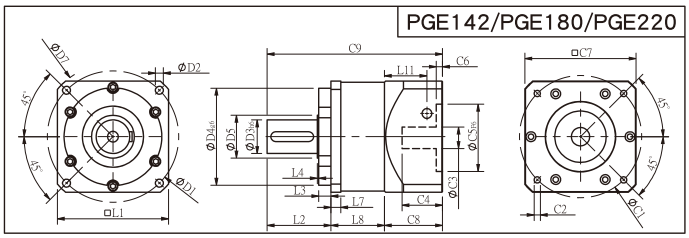

Specifications 規格

Unit:mm

尺寸 Dimensions	PGE50	PGE70	PGE90	PGE120	PGE142	PGE180	PGE220
D1	50	70	100	130	165	215	250
D2	3.4	6	6.5	8.5	10.5	13	17
D3 h6	13	16	22	32	40	55	75
D4 g6	35	50	80	110	130	160	180
D5	15	25	35	45	50	70	90
D6	M4x0.7P	M5x0.8P	M8x1.25P	M12x1.75P	M16x2.0P	M20x2.5P	M20x2.5P
D7	64	90	120	152	186	239	292
L1	50	70	94	120	142	182	220
L2	24.5	37	43	60	93	104.5	138
L3	4	7	5	6	8	20	30
L4	1.5	1.5	1.5	3	6	2.5	3
L5	15	25	32	40	60	70	90
L6	2	2	3	5	5	6	7
L7	5	6	10	12	18	16	20
L8	30	36	51	61	79	87.5	117.5
L9	4	4	4.5	6	6	8	7
L10	14	16.5	20.5	30	38	48	42
L11	24.4	31.5	36.5	42	63	69.5	102.2
C1 [2]	46	70	90	115	145	200	235
C2 [2]	M4x0.7P	M5x0.8P	M6x1.0P	M8x1.25P	M8x1.25P	M12x1.75P	M12x1.75P
C3 [2]	≦8	≦14	≦19/≦24	≦24/≦28	≦35	≦50	≦55
C4 [2]	27	35	43	58	66	82	98
C5 [2] F6	30	50	70	95	110	114.3	200
C6 [2]	4	5	5	8	6	13	12
C7 [2]	50	70	94	120	140	182	220
C8 [2]	38.5	46	55	63	80	95	130
C9 [2]	93	119	149	184	252	287	385.5
B	5	5	6	10	12	16	20
H	15	18	24.5	35	43	59	79.5

★ C1~C9是公製標準馬達連接板尺寸,請依所選用的馬達決定.

★ 本公司有權針對以上數據規格逕行設計變更不先行告知.

★ C1~C9 are motor specific dimensions(metric std shown), Size may vary according to the motor flange chosen.

★ Specification subject to change without notice.

PGE Double Stage Dimensions-1 PGE雙段外型尺寸圖-1

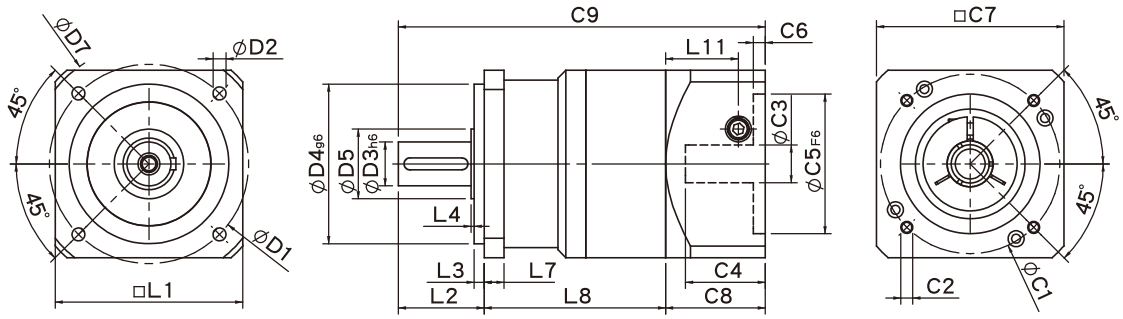

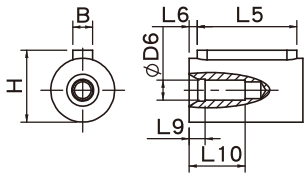

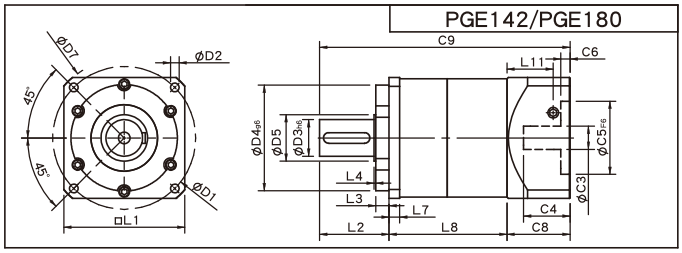

Specifications 規格

Unit:mm

尺寸 Dimensions	PGE50	PGE70	PGE90	PGE120	PGE142	PGE180
D1	50	70	100	130	165	215
D2	3.4	6	6.5	8.5	10.5	13
D3 h6	13	16	22	32	40	55
D4 g6	35	50	80	110	130	160
D5	15	25	35	45	50	70
D6	M4x0.7P	M5x0.8P	M8x1.25P	M12x1.75P	M16x2.0P	M20x2.5P
D7	64	90	120	152	186	239
L1	50	70	94	120	142	182
L2	24.5	37	43	60	93	104.5
L3	4	7	5	6	8	20
L4	1.5	1.5	1.5	3	6	2.5
L5	15	25	32	40	60	70
L6	2	2	3	5	5	6
L7	5	6	10	12	18	16
L8	56	64	91	109	140	177.5
L9	4	4	4.5	6	6	8
L10	14	16.5	20.5	30	38	48
L11	24.4	31.5	36.5	42	63	69.5
C1 [2]	46	70	90	115	145	200
C2 [2]	M4x0.7P	M5x0.8P	M6x1.0P	M8x1.25P	M8x1.25P	M12x1.75P
C3 [2]	≦8	≦14	≦19/≦24	≦24/≦28	≦35	≦50
C4 [2]	27	35	43	58	66	82
C5 [2] F6	30	50	70	95	110	114.3
C6 [2]	4	5	5	8	6	13
C7 [2]	50	70	94	120	140	182
C8 [2]	38.5	46	55	63	80	95
C9 [2]	119	147	189	232	313	377
B	5	5	6	10	12	16
H	15	18	24.5	35	43	59

★ C1~C9是公製標準馬達連接板尺寸,請依所選用的馬達決定.
★ 本公司有權針對以上數據規格逕行設計變更不先行告知.

★ C1~C9 are motor specific dimensions(metric std shown), Size may vary according to the motor flange chosen.
★ Specification subject to change without notice.

PGE Double Stage Dimensions-2 PGE雙段外型尺寸圖-2

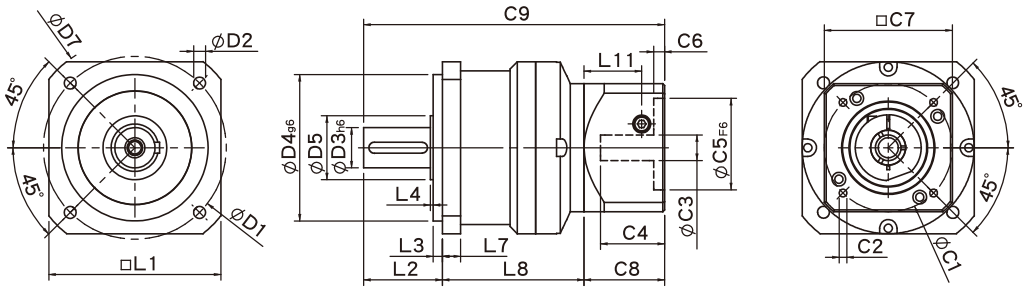

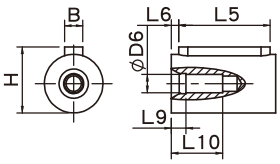

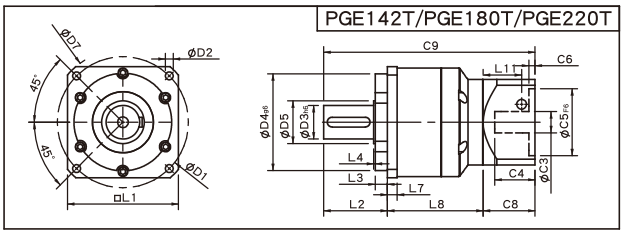

Specifications 規格

Unit:mm

尺寸 Dimensions	PGE70T	PGE90T	PGE120T	PGE142T	PGE180T	PGE220T
D1	70	100	130	165	215	250
D2	6	6.5	8.5	10.5	13	17
D3 h6	16	22	32	40	55	75
D4 g6	50	80	110	130	160	180
D5	25	35	45	50	70	90
D6	M5x0.8P	M8x1.25P	M12x1.75P	M16x2.0P	M20x2.5P	M20x2.5P
D7	90	120	152	186	239	292
L1	70	94	120	142	182	220
L2	37	43	60	93	104.5	138
L3	7	5	6	8	20	30
L4	1.5	1.5	3	6	2.5	3
L5	25	32	40	60	70	90
L6	2	3	5	5	6	7
L7	6	10	12	18	16	20
L8	58.8	77.5	99.4	127	157	199.5
L9	4	4.5	6	6	8	7
L10	16.5	20.5	30	38	48	42
L11	29	35.5	40.5	42	63	69.5
C1 [2]	66.67	70	90	115	145	200
C2 [2]	M5x0.8P	M5x0.8P	M6x1.0P	M8x1.25P	M8x1.25P	M12x1.75P
C3 [2]	≦8	≦14	≦19/≦24	≦24/≦28	≦35	≦50
C4 [2]	27	41	47.75	58	66	82
C5 [2] F6	38.1	50	70	95	110	114.3
C6 [2]	4	8	6	8	6	13
C7 [2]	60	70	94	120	140	182
C8 [2]	38.5	50	55	63	80	95
C9 [2]	134.3	170.5	214.4	283	341.5	432.5
B	5	6	10	12	16	20
H	18	24.5	35	43	59	79.5

★ C1~C9是公製標準馬達連接板尺寸,請依所選用的馬達決定.

★ 本公司有權針對以上數據規格逕行設計變更不先行告知.

★ C1~C9 are motor specific dimensions(metric std shown), Size may vary according to the motor flange chosen.

★ Specification subject to change without notice.

PGE Specifications Table PGE性能規格共表

規格 Specifications		節數 Stage	減速比 Ratio	PGE-50	PGE-70	PGE-90	PGE-120	PGE-142	PGE-180	PGE-220
額定輸出力矩 T_{2N} Nominal Output Torque	N • m	1	3	13.8	44.2	95.2	283	482	1151	1670
			4	11.9	35.9	74.6	249	490	1055	1574
			5	13.8	43.0	95.2	283	473	1151	1670
			7	11.9	36.0	85.6	219	400	1055	1574
			10	10.1	25.0	75.0	210	320	763	1184
		節數 Stage	減速比 Ratio	PGE-50	PGE-70(T)	PGE-90(T)	PGE-120(T)	PGE-142(T)	PGE-180(T)	PGE-220 T
		2	15	13.8	44.2	95.2	283	482	1151	1670
			20	11.9	35.9	74.6	249	490	1055	1574
			25	13.8	43.0	95.2	283	473	1151	1670
			30	13.8	43.0	95.2	283	473	1151	1670
			35	13.8	43.0	95.2	283	473	1151	1670
			40	13.8	43.0	95.2	283	473	1151	1670
			50	13.8	43.0	95.2	283	473	1151	1670
			70	11.9	36.0	85.6	219	400	1055	1574
			100	10.1	25.0	75.0	210	320	763	1184
急停力矩 T_{2NOT} Emergency Stop Torque	N • m		3.0 倍額定輸出力矩 (3.0 times of Nominal Output Torque) (* 最大輸出力矩 Max. Output Torque T_{2B}=60% of Emergency Stop Torque)							
額定輸入轉速 n_{1N} Nominal Input Speed	rpm	1,2	3-100	3000	3000	3000	2500	2000	2000	2000
最大輸入轉速 n_{1max} Max. Input Speed	rpm	1,2	3-100	6000	6000	6000	5000	4000	4000	4000
超精密背隙 Micro Backlash P0	arcmin	1	3-10	-	-	-	≦3	≦3	≦3	≦3
		2	15-100	-	-	-	≦5	≦5	≦5	≦5
精密背隙 Precision Backlash P1	arcmin	1	3-10	-	≦6	≦6	≦5	≦5	≦5	≦5
		2	15-100	-	≦9	≦9	≦7	≦7	≦7	≦7
標準背隙 Standard Backlash P2	arcmin	1	3-10	≦12	≦9	≦9	≦7	≦7	≦7	≦7
		2	15-100	≦15	≦12	≦12	≦9	≦9	≦9	≦9
扭轉剛性Torsional Rigidity	N • m /arcmin	1,2	3-100	1.0	2.8	7.5	15.5	30	57	110
容許徑向力 F_{2rB} [1] Max. Radio Load	N	1,2	3-100	450	1200	2050	4250	7680	9080	13500
容許軸向力 F_{2aB} [1] Max. Axial Load	N	1,2	3-100	320	900	1420	2930	4680	5100	7300
使用溫度 Operating Temp.	°C		3-100	-10 °C ~+90 °C						
使用壽命Service Life	hr		3-100	20,000 (10,000/ 連續運轉 Continuous operation)						
效率 Efficiency	%	1	3-10	≧96%						
		2	15-100	≧92%						
重量 Weight	kg	1	3-10	0.7	1.4	3.0	7.3	15.6	26	56
		2	15-100	0.9	2.2(1.7)	5.0(3.4)	11.5(8.5)	20.7(17.2)	36(31)	80(62)
安裝方向 Mounting Position	-	1,2	3-100	任意方向Any direction						
噪音值 Noise Level [2]	dBA/1m	1,2	3-100	60	62	65	65	70	70	75
防護等級 Protection Class	-	1,2	3-100	IP65						
潤滑 Lubrication	-	1,2	3-100	全合成潤滑油 Synthetic Lubricant						

減速機轉動慣量 Inertia(J1)

節數Stage	減速比Ratio	單位unit	PGE-50	PGE-70	PGE-90	PGE-120	PGE-142	PGE-180	PGE-220
1	3	Kg • cm^2	0.03	0.20	0.81	2.20	7.89	25.2	77.9
	4		0.02	0.16	0.65	1.80	5.83	19.8	56.5
	5		0.02	0.15	0.62	1.61	5.38	18.3	53.3
	7		0.02	0.14	0.60	1.55	5.22	17.8	53.0
	10		0.02	0.14	0.60	1.53	5.20	17.6	52.9
節數Stage	減速比Ratio		PGE-50	PGE-70(T)	PGE-90(T)	PGE-120(T)	PGE-142(T)	PGE-180(T)	PGE-220 T
2	15/20/25		0.02	0.15(0.02)	0.62(0.15)	1.61(0.62)	5.38(1.61)	18.3(5.38)	53.9(18.3)
	30/35/40		0.02	0.14(0.02)	0.60(0.14)	1.55(0.60)	5.22(1.55)	17.8(5.22)	53.0(17.8)
	50/70/100		0.02	0.14(0.02)	0.60(0.14)	1.53(0.60)	5.20(1.53)	17.6(5.20)	52.9(17.6)

* 1. 輸出轉速 100rpm 時，作用於輸出軸中心位置。Applied to the output shaft center @100rpm.
* 2. 3000rpm 空載量測。Measured at 3000 rpm with no load. These values are measured by gearbox with ratio = 10 (1-stage) or ratio = 100 (2-stage) at nominal input speed or 3000 rpm (if nominal input speed is higher than 3000 rpm) with no load.

※本公司有權對以上數據規格逕行設計變更不先行告知。The above figures/specifications are subject to change without prior notice.

Products due to human error, natural disasters or other factors lead to poor or damaged, will not be covered under warranty.
產品因人為原因或天災等因素導致不良或損壞，不在保固範圍內。

SGC SERIES

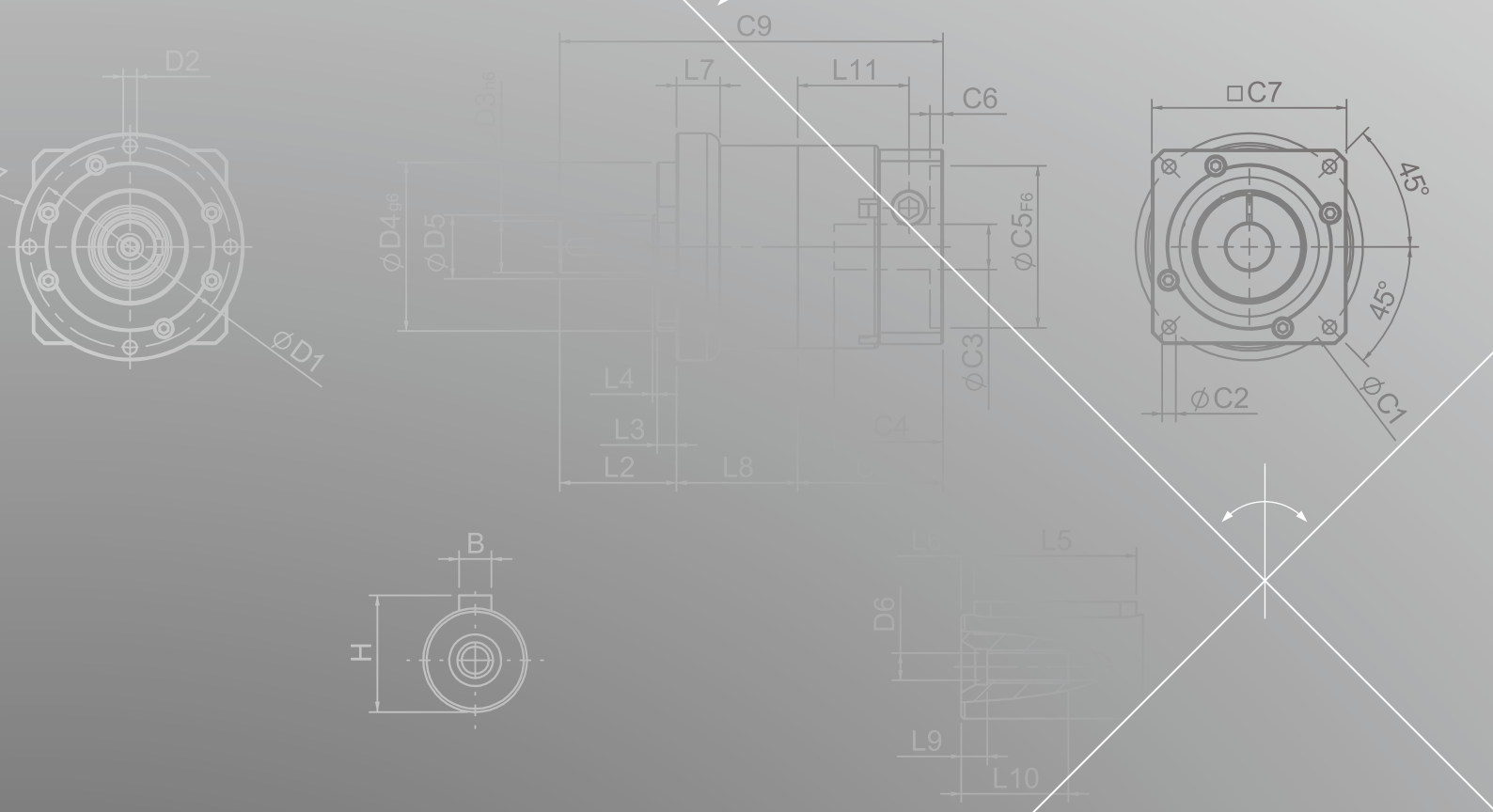
D2
ØD1
C9
L7
L11
C6
ØD3h6
ØD4g6
ØD5
ØC5F6
ØC3
L4
L3
L2
L8
C4
□C7
45°
45°
ØC2
ØC1
B
H
L6
L5
D6
L9
L10

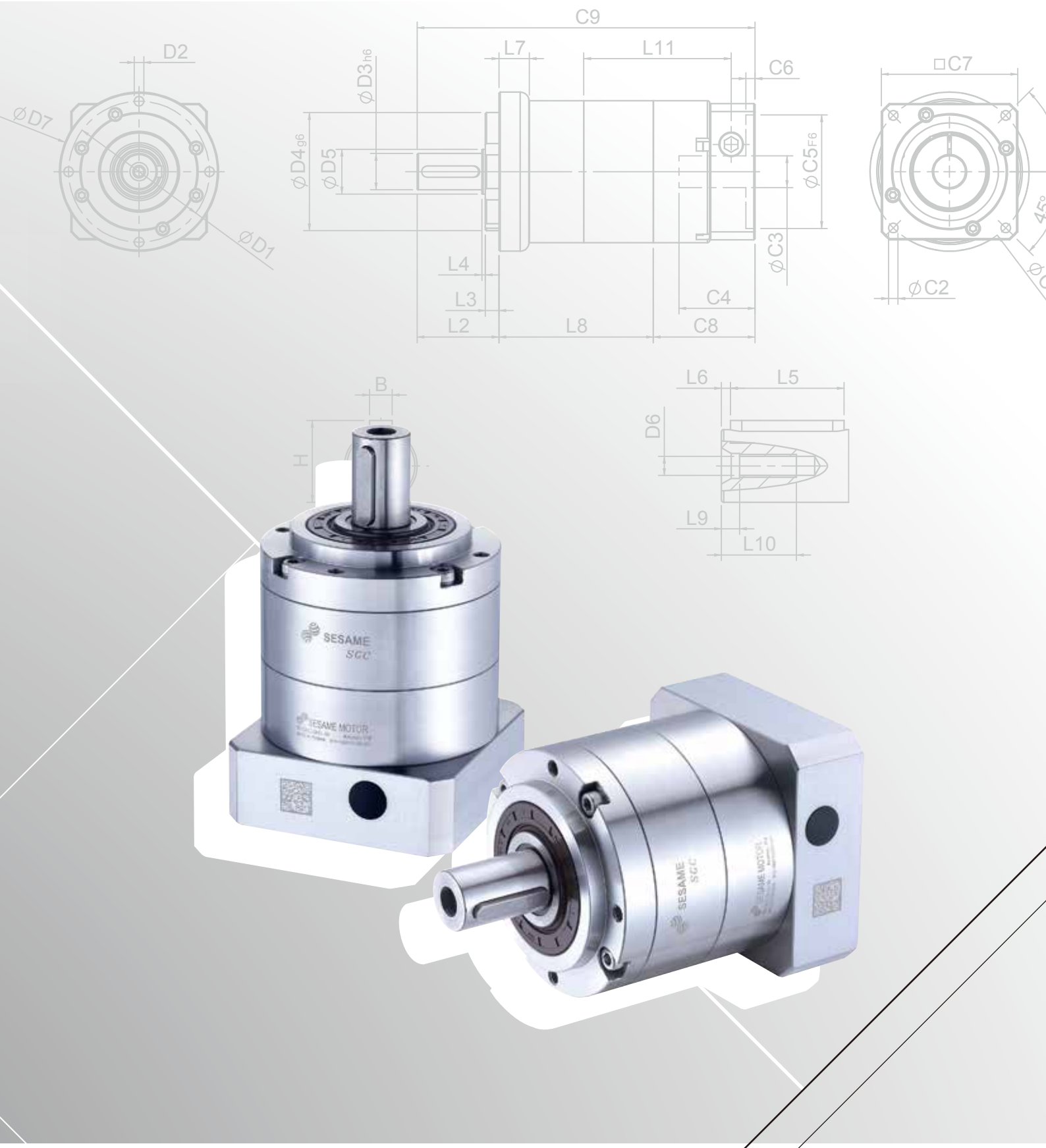
D2
ØD7
ØD1
C9
L7
L11
C6
ØD3h6
ØD4g6
ØD5
ØC5F6
ØC3
L4
L3
L2
L8
C4
C8
□C7
45°
ØC2
B
H
L6
L5
D6
L9
L10
SESAME
SGC
SESAME MOTOR

SGC Single Stage Dimensions SGC單段外型尺寸圖

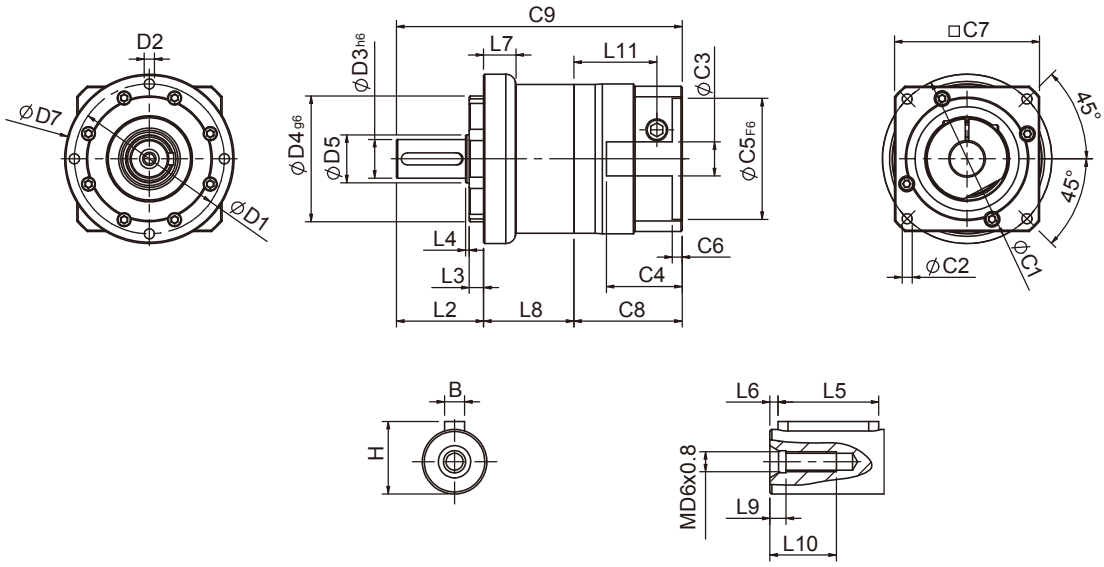

Specifications 規格

Unit:mm

尺寸 Dimensions	SGC50	SGC70	SGC90
D1	-	62	80
D2	-	M5x0.8P	M6x1.0P
D3 h6	-	16	22
D4 g6	-	52	68
D5	-	20	35
D6	-	M5x0.8P	M8x1.25P
D7	-	70	90
L2	-	36	46
L3	-	6	7
L4	-	1.5	2.5
L5	-	25	32
L6	-	2	3
L7	-	13.4	14.1
L8	-	37.3	43.8
L9	-	4	4.5
L10	-	16.5	20.5
L11	-	34.3	41.5
C1 [2]	-	70	90
C2 [2]	-	M5x0.8P	M6x1.0P
C3 [2]	-	≦14/≦19	≦19/≦24/≦28
C4 [2]	-	33.5	41
C5 [2] F6	-	50	70
C6 [2]	-	4	6
C7 [2]	-	60	90
C8 [2]	-	44.8	55.8
C9 [2]	-	118.1	145.6
B	-	5	6
H	-	18	24.5

★ C1~C9是公製標準馬達連接板尺寸,請依所選用的馬達決定.

★ 本公司有權針對以上數據規格逕行設計變更不先行告知.

★ C1~C9 are motor specific dimensions(metric std shown), Size may vary according to motor flange.

★ Specification subject to change without notice.

SGC Double Stage Dimensions SGC雙段外型尺寸圖

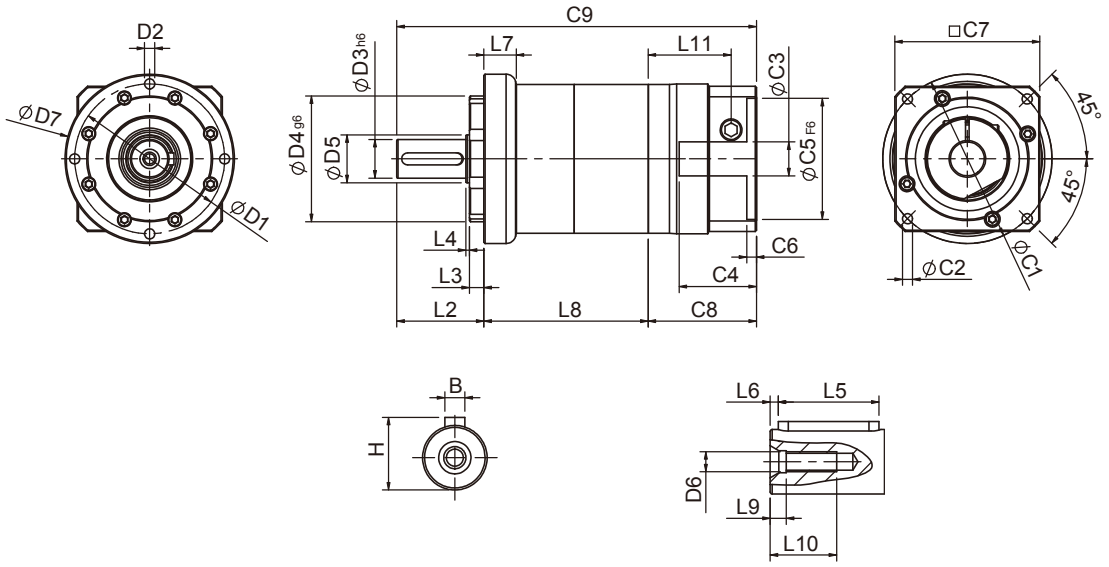

Specifications 規格

Unit:mm

尺寸 Dimensions	SGC50	SGC70	SGC90
D1	-	62	80
D2	-	M5x0.8P	M6x1.0P
D3 h6	-	16	22
D4 g6	-	52	68
D5	-	20	35
D6	-	M5x0.8P	M8x1.25P
D7	-	70	90
L2	-	36	46
L3	-	6	7
L4	-	1.5	2.5
L5	-	25	32
L6	-	2	3
L7	-	13.4	14.1
L8	-	67.9	84.7
L9	-	4	4.5
L10	-	16.5	20.5
L11	-	34.3	41.5
C1 [2]	-	70	90
C2 [2]	-	M5x0.8P	M6x1.0P
C3 [2]	-	≦14/≦19	≦19/≦24/≦28
C4 [2]	-	33.5	41
C5 [2] F6	-	50	70
C6 [2]	-	4	6
C7 [2]	-	60	90
C8 [2]	-	44.8	55.8
C9 [2]	-	148.7	186.5
B	-	5	6
H	-	18	24.5

★ C1~C9是公製標準馬達連接板尺寸,請依所選用的馬達決定.
★ 本公司有權針對以上數據規格逕行設計變更不先行告知.

★ C1~C9 are motor specific dimensions(metric std shown), Size may vary according to motor flange.
★ Specification subject to change without notice.

SGC Specifications Table SGC性能規格共表

規格 Specifications		節數 Stage	減速比 Ratio	SGC-50	SGC-70	SGC-90	SGC-120
額定輸出力矩 T_{2N} Nominal Output Torque	N · m	1	3	9	28	85	220
			4	10	32	80	240
			5	11	35	95	270
			7	10	28	85	220
			9	8	23	75	210
			10	8	21	65	190
		節數 Stage	減速比 Ratio	SGC-50	SGC-70(T)	SGC-90(T)	SGC-120T
		2	15	11	34	90	250
			20	10	32	80	240
			25	11	35	95	270
			35	11	35	95	270
			45	11	35	95	270
			49	10	28	85	220
			63	10	28	85	220
			81	8	23	75	210
			100	8	21	65	190
急停力矩 T_{2NOT} Emergency Stop Torque	N · m	3.0 倍額定輸出力矩 (3.0 times of Nominal Output Torque) (* 最大輸出力矩 Max. Output Torque T_{2B} =60% of Emergency Stop Torque)					
額定輸入轉速 n_{1N} Nominal Input Speed	rpm	1,2	3-100	4000	4000	3000	2500
最大輸入轉速 n_{1max} Max. Input Speed	rpm	1,2	3-100	6000	6000	6000	5000
標準背隙 Standard Backlash P2	arcmin	1	3-10	≦9	≦8	≦7	≦6
		2	15-100	≦12	≦10	≦9	≦8
扭轉剛性 Torsional Rigidity	N · m /arcmin	1,2	3-100	1.5	4.0	8.5	17
容許徑向力 F_{2rB} [1] Max. Radial Load	N	1,2	3-100	760	1250	2030	4200
容許軸向力 F_{2aB} [1] Max. Axial Load	N	1,2	3-100	410	700	1200	2600
使用溫度 Operating Temp.	℃	1,2	3-100	-10℃ ~ +90 ℃			
使用壽命 Service Life	hr	1,2	3-100	20,000 (10,000/連續運轉 Continuous operation)			
效率 Efficiency	%	1	3-10	≧95%			
		2	15-100	≧90%			
重量 Weight	kg	1	3-10	0.9	1.9	4.8	11.5
		2	15-100	1.1	2.4(2.2)	6.5(5.4)	13.5
安裝方向 Mounting Position	-	1,2	3-100	任意方向 Any Direction			
噪音值 Noise Level [2]	dBA/1m	1,2	3-100	61	63	66	67
防護等級 Protection Class	-	1,2	3-100	IP65 (Optional : IP67)			
潤滑 Lubrication	-	1,2	3-100	全合成潤滑油脂 Synthetic Lubricant (Optional: Food Grade Grease)			

減速機轉動慣量 Inertia(J1)

節數 Stage	減速比 Ratio	單位 unit	SGC-50(ψ8)	SGC-70(ψ14)	SGC-90(ψ19)	SGC-120(ψ24)
1	3	Kg · cm²	0.04	0.23	0.77	2.30
	4		0.03	0.21	0.67	1.92
	5		0.03	0.21	0.61	1.71
	7		0.03	0.21	0.60	1.65
	9/10		0.03	0.21	0.60	1.63
節數 Stage	減速比 Ratio		SGC-50(ψ8)	SGC-70(ψ14)/ SGC-70T(ψ8)	SGC-90(ψ19)/ SGC-90T(ψ14)	SGC-120T(ψ19)
2	15/20/25		0.03	0.21(0.03)	0.61(0.21)	0.61
	35/49		0.03	0.21(0.03)	0.60(0.21)	0.60
	45/63/81/100		0.03	0.21(0.03)	0.60(0.21)	0.60

1. 輸出轉速 100rpm 時，作用於輸出軸中心位置。Applied to the output shaft center @100rpm.
2. 3000rpm 空載量測。Measured at 3000 rpm with no load. These values are measured by gearbox with ratio = 10 (1-stage) or ratio = 100 (2-stage) at nominal input speed or 3000 rpm (if nominal input speed is higher than 3000 rpm) with no load.

※本公司有權對以上數據規格逕行設計變更不先行告知。The above figures/specifications are subject to change without prior notice.

Products due to human error, natural disasters or other factors lead to poor or damaged, will not be covered under warranty.
產品因人為原因或天災等因素導致不良或損壞，不在保固範圍內。


SESAME
SGC
SESAME MOTOR

SGE SERIES

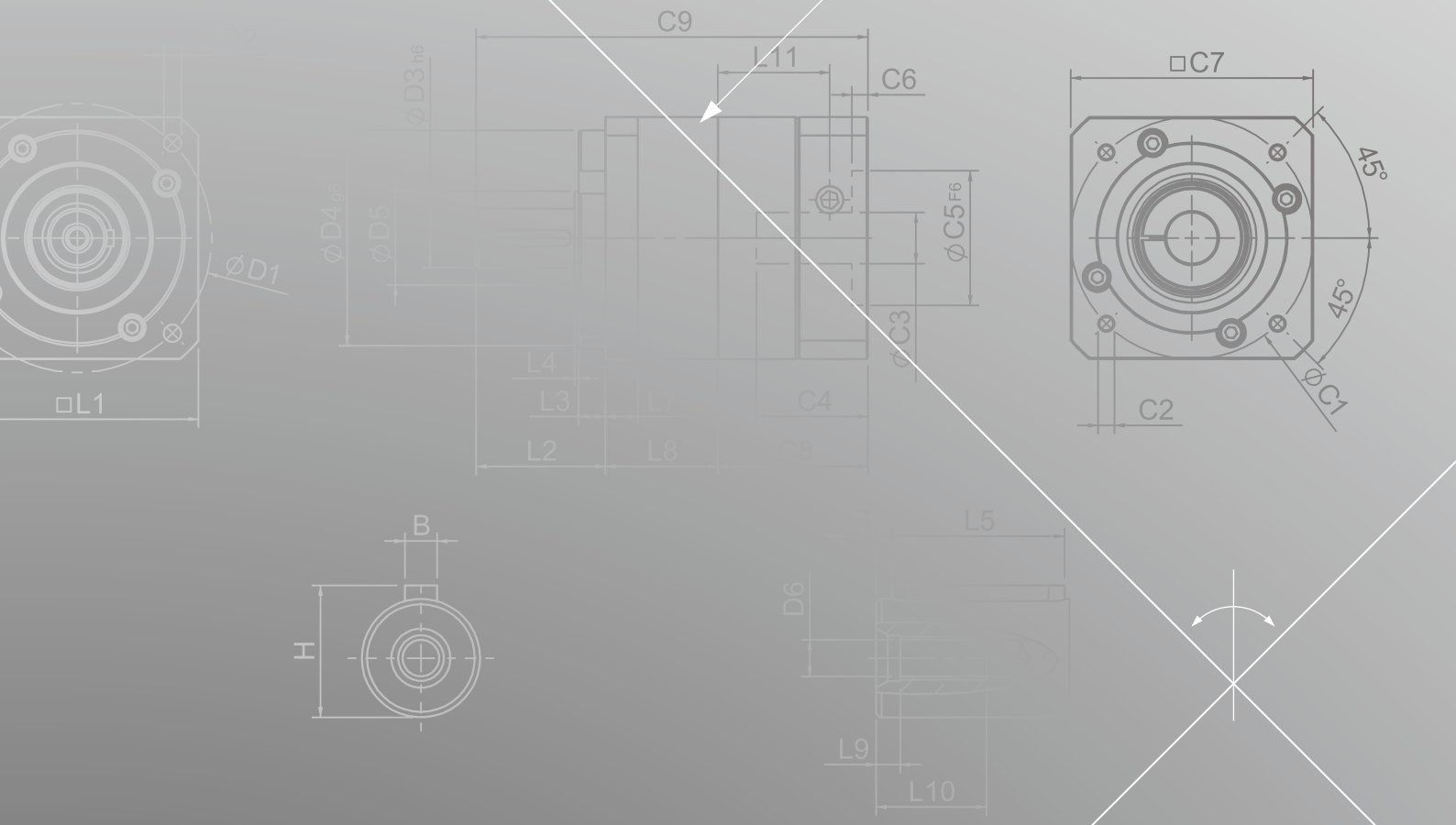
C9
L11
C6
□C7
45°
45°
ØC5F6
C3
ØC1
C2
ØD1
□L1
L4
L3
L2
L8
C4
B
H
L5
D6
L9
L10

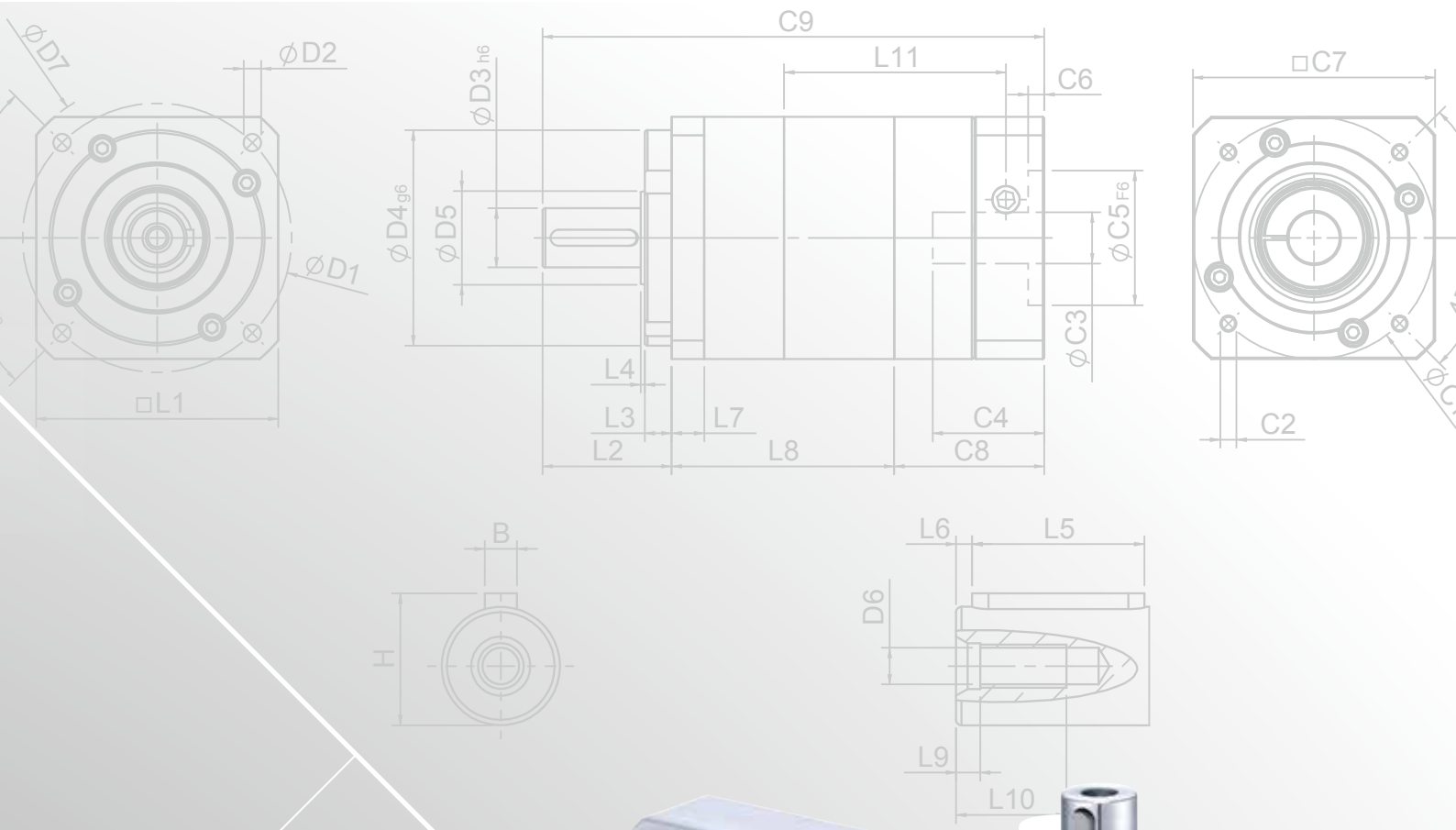
ØD7
ØD2
ØD1
□L1
C9
L11
C6
ØD3h6
ØD4g6
ØD5
ØC5F6
ØC3
L4
L3
L7
L2
L8
C4
C8
□C7
C2
B
H
L6
L5
D6
L9
L10


SESAME
SGE
SESAME MOTOR

SGE Single Stage Dimensions SGE單段外型尺寸圖

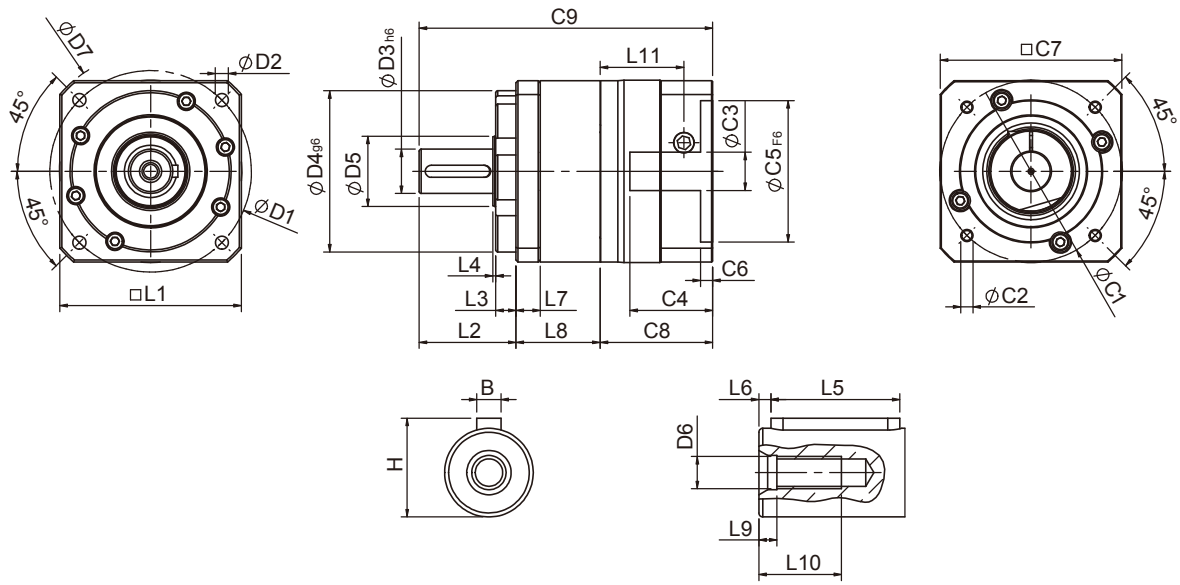

Specifications 規格

Unit:mm

尺寸 Dimensions	SGE42	SGE60	SGE90
D1	-	70	100
D2	-	5.5	6.5
$D3_{h6}$	-	16	22
$D4_{g6}$	-	50	80
D5	-	20	35
D6	-	M5x0.8P	M8x1.25P
D7	-	80	118
L1	-	62.5	90
L2	-	37	48
L3	-	7	10
L4	-	1.5	1.5
L5	-	25	32
L6	-	2	3
L7	-	10	12.1
L8	-	36.3	41.8
L9	-	4	4.5
L10	-	16.5	20.5
L11	-	34.3	41.5
C1 [2]	-	70	90
C2 [2]	-	M5x0.8P	M6x1.0P
C3 [2]	-	≦14/≦19	≦19/≦24/≦28
C4 [2]	-	33.5	41
$C5^{2}_{F6}$	-	50	70
C6 [2]	-	4	6
C7 [2]	-	60	90
C8 [2]	-	44.8	55.8
C9 [2]	-	118.1	145.6
B	-	5	6
H	-	18	24.5

★ C1~C9是公製標準馬達連接板尺寸,請依所選用的馬達決定.

★ 本公司有權針對以上數據規格逕行設計變更不先行告知.

★ C1~C9 are motor specific dimensions(metric std shown), Size may vary according to motor flange.

★ Specification subject to change without notice.

SGE Double Stage Dimensions SGE雙段外型尺寸圖

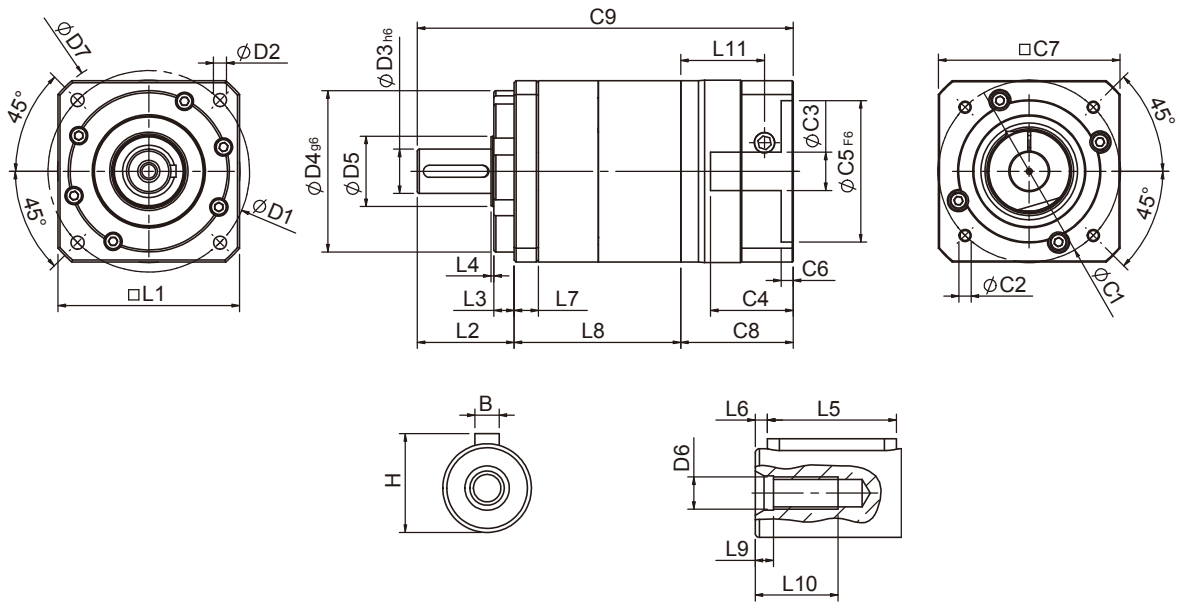

Specifications 規格

Unit:mm

尺寸 Dimensions	SGE42	SGE60	SGE90
D1	-	70	100
D2	-	5.5	6.5
$D3_{h6}$	-	16	22
$D4_{g6}$	-	50	80
D5	-	20	35
D6	-	M5x0.8P	M8x1.25P
D7	-	80	118
L1	-	62.5	90
L2	-	37	48
L3	-	7	10
L4	-	1.5	1.5
L5	-	25	32
L6	-	2	3
L7	-	10	12.1
L8	-	66.9	82.7
L9	-	4	4.5
L10	-	16.5	20.5
L11	-	34.3	41.5
C1 [2]	-	70	90
C2 [2]	-	M5x0.8P	M6x1.0P
C3 [2]	-	≦14/≦19	≦19/≦24/≦28
C4 [2]	-	33.5	41
$C5^{2}{}_{F6}$	-	50	70
C6 [2]	-	4	6
C7 [2]	-	60	90
C8 [2]	-	44.8	55.8
C9 [2]	-	148.7	186.5
B	-	5	6
H	-	18	24.5

★ C1~C9是公製標準馬達連接板尺寸,請依所選用的馬達決定.
★ 本公司有權針對以上數據規格逕行設計變更不先行告知.

★ C1~C9 are motor specific dimensions(metric std shown), Size may vary according to motor flange.
★ Specification subject to change without notice.

SGE Specifications Table SGE性能規格共表

規格 Specifications		節數 Stage	減速比 Ratio	SGE-42	SGE-60	SGE-90	SGE-115
額定輸出力矩 T_{2N} Nominal Output Torque	N · m	1	3	9	28	85	220
			4	10	32	80	240
			5	11	35	95	270
			7	10	28	85	220
			9	8	23	75	210
			10	8	21	65	190
		節數 Stage	減速比 Ratio	SGE-42	SGE-60(T)	SGE-90(T)	SGE-115T
		2	15	11	34	90	250
			20	10	32	80	240
			25	11	35	95	270
			35	11	35	95	270
			45	11	35	95	270
			49	10	28	85	220
			63	10	28	85	220
			81	8	23	75	210
			100	8	21	65	190
急停力矩 T_{2NOT} Emergency Stop Torque	N · m	3.0 倍額定輸出力矩 (3.0 times of Nominal Output Torque) (* 最大輸出力矩 Max. Output Torque T_{2B} =60% of Emergency Stop Torque)					
額定輸入轉速 n_{1N} Nominal Input Speed	rpm	1,2	3-100	4000	4000	3000	2500
最大輸入轉速 n_{1max} Max. Input Speed	rpm	1,2	3-100	6000	6000	6000	5000
標準背隙 Standard Backlash P2	arcmin	1	3-10	≦9	≦8	≦7	≦6
		2	15-100	≦12	≦10	≦9	≦8
扭轉剛性 Torsional Rigidity	N · m /arcmin	1,2	3-100	1.5	4.0	8.5	17
容許徑向力 F_{2rB} [1] Max. Radial Load	N	1,2	3-100	760	1250	2030	4200
容許軸向力 F_{2aB} [1] Max. Axial Load	N	1,2	3-100	410	700	1200	2600
使用溫度 Operating Temp.	℃	1,2	3-100	-10℃ ~ +90 ℃			
使用壽命 Service Life	hr	1,2	3-100	20,000 (10,000/連續運轉 Continuous operation)			
效率 Efficiency	%	1	3-10	≧95%			
		2	15-100	≧90%			
重量 Weight	kg	1	3-10	0.9	1.9	4.8	11.5
		2	15-100	1.1	2.4(2.2)	6.5(5.4)	13.5
安裝方向 Mounting Position	-	1,2	3-100	任意方向 Any Direction			
噪音值 Noise Level [2]	dBA/1m	1,2	3-100	61	63	66	67
防護等級 Protection Class	-	1,2	3-100	IP65 (Optional : IP67)			
潤滑 Lubrication	-	1,2	3-100	全合成潤滑油脂 Synthetic Lubricant (Optional: Food Grade Grease)			

減速機轉動慣量 Inertia(J1)

節數 Stage	減速比 Ratio	單位 unit	SGE-42(ψ8)	SGE-60(ψ14)	SGE-90(ψ19)	SGE-115(ψ24)
1	3	Kg · cm^2	0.04	0.23	0.77	2.30
	4		0.03	0.21	0.67	1.92
	5		0.03	0.21	0.61	1.71
	7		0.03	0.21	0.60	1.65
	9/10		0.03	0.21	0.60	1.63
節數 Stage	減速比 Ratio		SGE-42(ψ8)	SGE-60(ψ14)/ SGE-60T(ψ8)	SGE-90(ψ19)/ SGE-90T(ψ14)	SGE-115T(ψ19)
2	15/20/25		0.03	0.21(0.03)	0.61(0.21)	0.61
	35/49		0.03	0.21(0.03)	0.60(0.21)	0.60
	45/63/81/100		0.03	0.21(0.03)	0.60(0.21)	0.60

1. 輸出轉速 100rpm 時，作用於輸出軸中心位置。Applied to the output shaft center @100rpm.
2. 3000rpm 空載量測。Measured at 3000 rpm with no load. These values are measured by gearbox with ratio = 10 (1-stage) or ratio = 100 (2-stage) at nominal input speed or 3000 rpm (if nominal input speed is higher than 3000 rpm) with no load.

※本公司有權對以上數據規格逕行設計變更不先行告知。The above figures/specifications are subject to change without prior notice.

Products due to human error, natural disasters or other factors lead to poor or damaged, will not be covered under warranty.
產品因人為原因或天災等因素導致不良或損壞，不在保固範圍內。


SESAME
SGE
SESAME MOTOR

PGRH SERIES

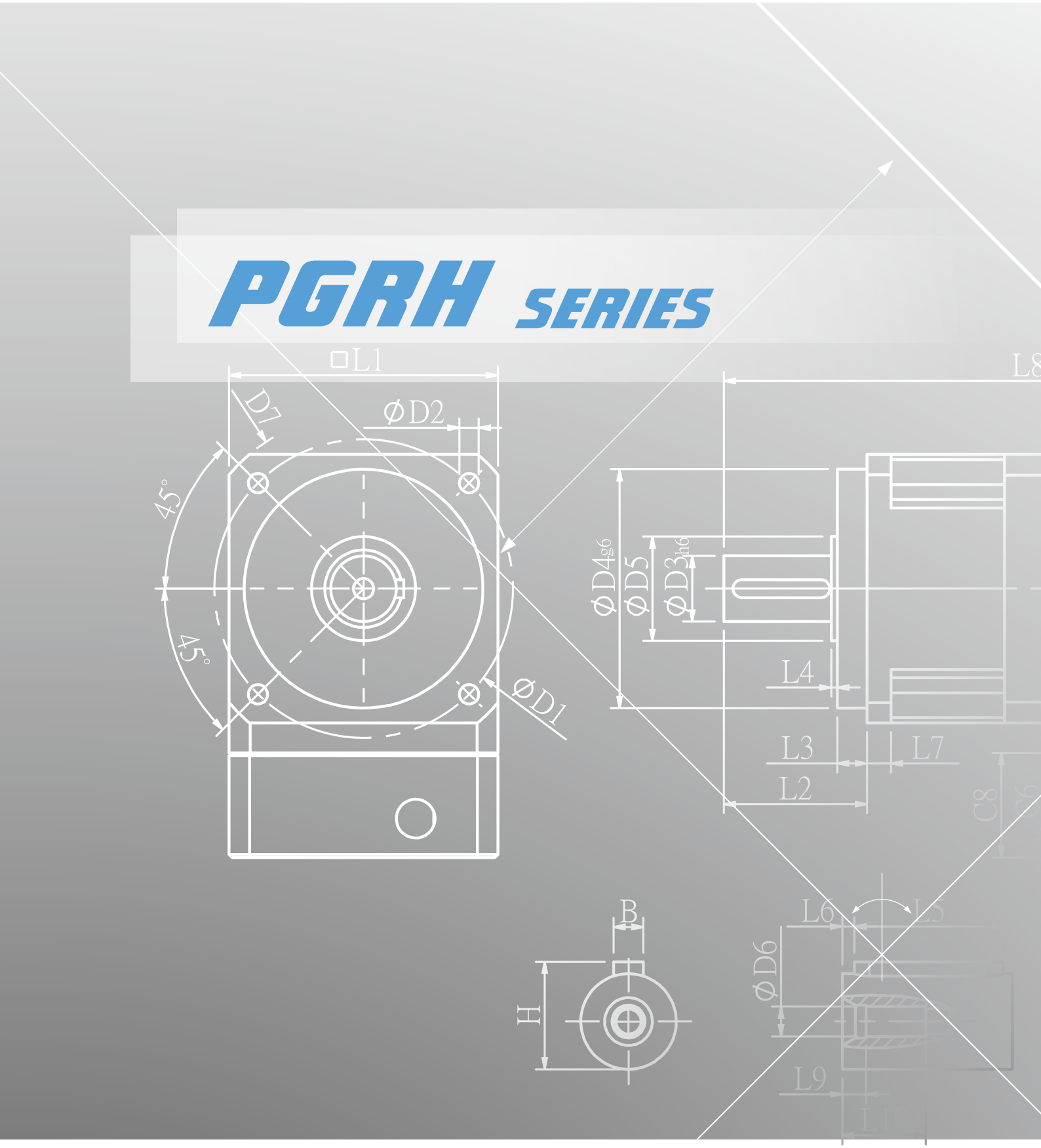
□L1
D7
ØD2
45°
45°
ØD1
L8
ØD4g6
ØD5
ØD3h6
L4
L3
L7
L2
C8
B
H
L6
ØD6
L9
L10

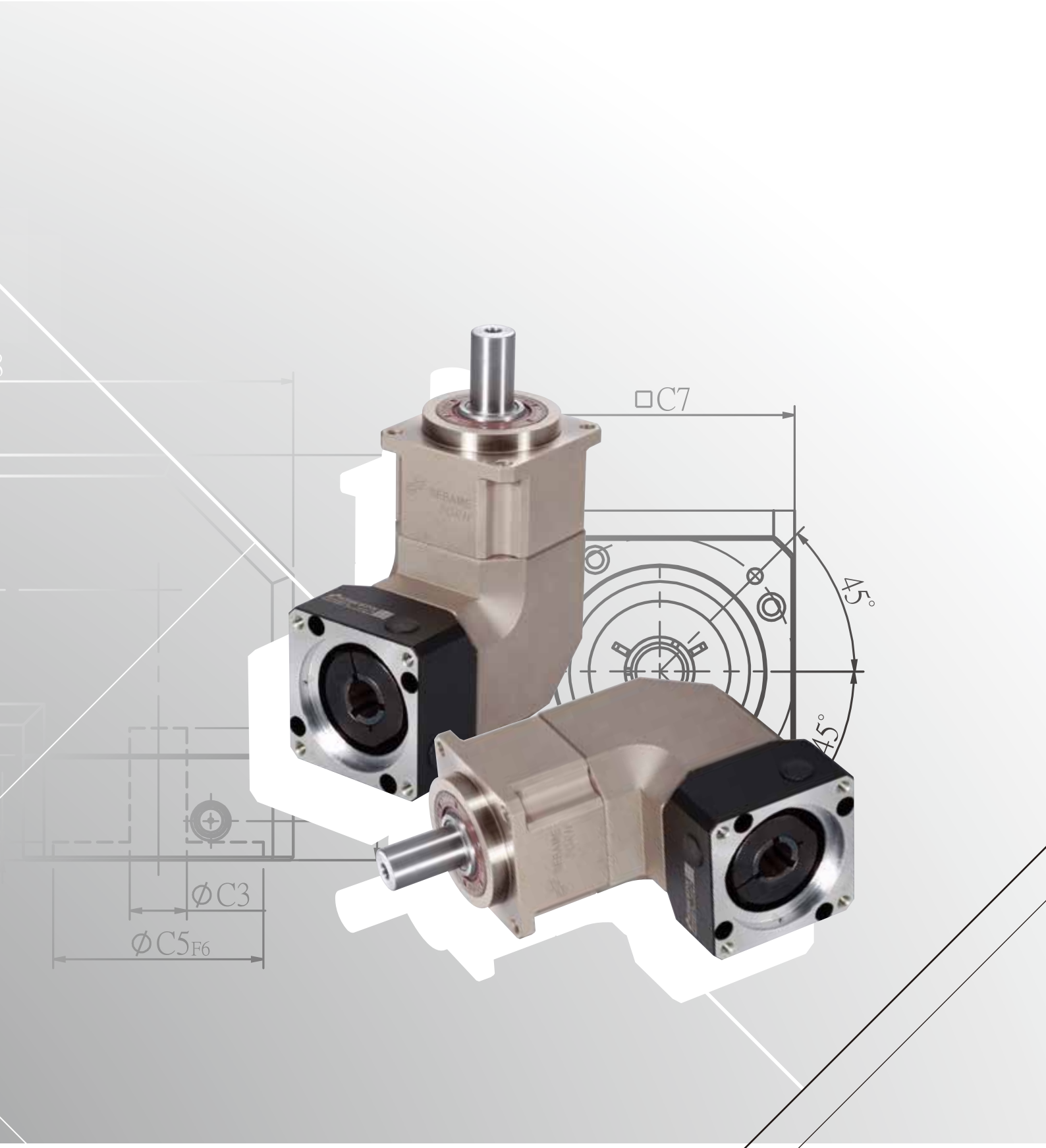
□C7
45°
45°
ϕC3
ϕC5F6

PGRH SERIES FEATURES PGRH系列 產品特點

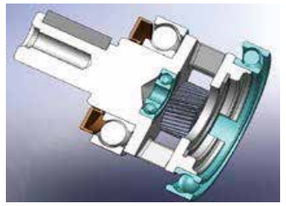

行星固定架及出力軸設計一體成型，且前後培林設定位置為大跨距，可達到最大扭轉剛性及出力軸高徑向負載能力。
Planetary arm bracket and output shaft are one-piece constructed, setting bearing apart for larger span to reach the largest reverse rigid and contribute high axis radial load capacity.

齒輪材質選用高級合金鋼，獨特熱處理至最佳硬度，兼具表面硬度及心部韌度，並經過齒型研磨加工，以獲得最佳的精度、高耐磨耗及高耐衝擊韌性。
Alloy steel gear with unique heat treatment. Additionally, with gear grinding processing to get the best accuracy, high wear resistance and high impact toughness.

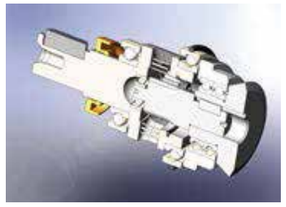

太陽齒前端軸承直接置入於行星固定架內，整體機械結構設計，以確保傳動元件的同心度。
The sun gear bearing is placed directly into the planetary arm bracket, the overall mechanical structure designed to ensure concentricity of the transmission components.

螺旋傘型齒輪採用高級合金鋼為材質，在滾齒加工及熱處理後，達到高精準度咬合點及低背隙、低噪音。
Alloy steel spiral bevel gears selected after hobbing and heat treatment to ensure high accuracy of the engagement point, low backlash and low noise.

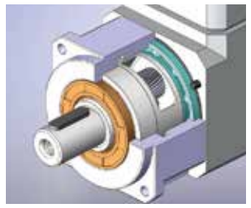

出力軸表面與油封搭配確保最低磨擦係數和減少啓動負載，保持最佳密封性，延長使用壽命。
Grinding process to smooth surface of output shaft, and with oil-seal to minimum friction coefficient and reducing start up load; result in the best seal-ability and extended lifespan.

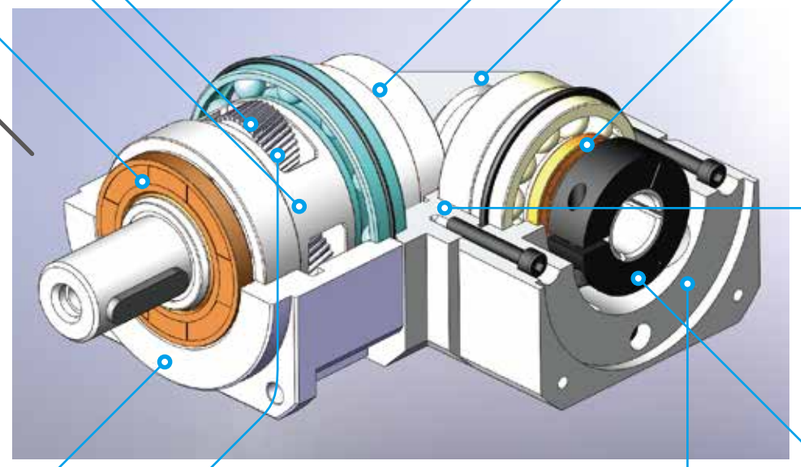

PGRH系列整體設計上可容許伺服馬達高轉速的輸入，達到最大扭力輸出。直角設計可節省空間。精密齒輪設計及專業齒輪加工，製造出低運轉背隙、高效率、低噪音及長壽命的行星減速機。
PGRH Series overall design suitable for combination operation with servo motor high-speed input and achieves maximum torque output. Right-angular designed drastically reducing the installation space. Precision gear design and gear processing create a planetary gearhead with low backlash operation, high efficiency, low noise and long lifespan.

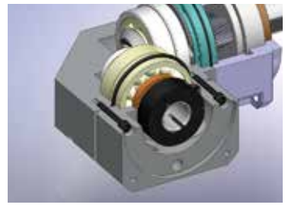

高科技油封設計上唇為防塵唇，下唇為防油唇。採IP65防護等級的密封設計，採用高級潤滑油脂，不洩漏、免保養。
High-tech oil seal design on the upper lip guard against dust intruder, lower lip to guard against oil leak. Advanced lubricants grease and IP65 protection safeguards fully avoid leaking and given it maintenance-free.

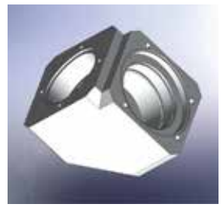

直角加工採用高精準度CNC設備。超越業界技術門檻與傘齒輪獲得最高精密組合。螺旋傘齒箱表面無電解鎳處理，耐刮及耐腐蝕最適合高科技設備嚴苛需求。
Right angular gear box processed by precision CNC equipment to obtain the highest combination with spiral bevel gears. Advanced electroless nickel plating surface treatment resists scratch and corrosion. Suitable for stringent require of high-tech equipment.

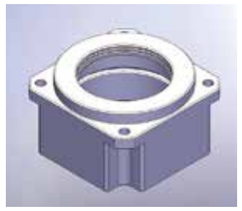

先進無電解鎳表面處理，耐刮，耐腐蝕，最適合高科技設備嚴苛要求。
本體齒箱與內環齒一體鍛造成形，再經德國頂級插齒機加工。具有高精密度，高扭力，耐磨耗等特點。
Advanced electroless nickel plating surface treatment resists scratch and corrosion. Suitable for stringent require of high-tech equipment.
The gear box and internal gear ring are one-piece constructed, and then processed with advanced Germany gear shaper machinery for high-precision, high torque and abrade consumption.

行星齒輪傳動介面採用針狀軸承，滿針排列不含保持器，以達到最大接觸面積最小間隙公差，提高結構剛性及輸出扭力。
Planet gear transmission interface equipped with needle bearings, full needle roller bearings aligned without retainer achieve maximum exposure but smallest gap tolerances. Enhance over-all gear structure rigid and output torque.

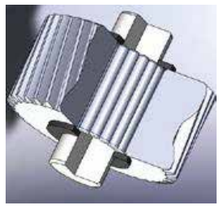

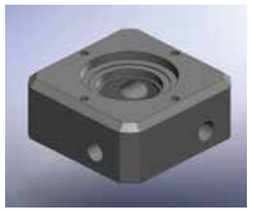

先進馬達連接板設計，配合入力軸襯套，安裝容易，可與各種廠牌之伺服、步進馬達完美搭配組合。
Advanced motor bracket design coupled with the input shaft bushing is easy to mount to any servo or stepper motor.

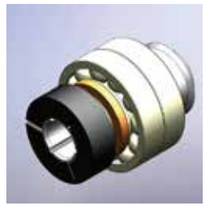

輸入端與馬達入力軸連結方法採用拴緊式機構，鎖緊環經過動平衡分析，確保高轉速下，結合介面的同心度及零滑差動力傳遞。
Input-end and motor shaft are coupled through a dynamic balanced collar clamping mechanism to ensure connection interface concentricity and zero slip power transmission at high speed.

PGRH Single Stage Dimensions PGRH單段外型尺寸圖

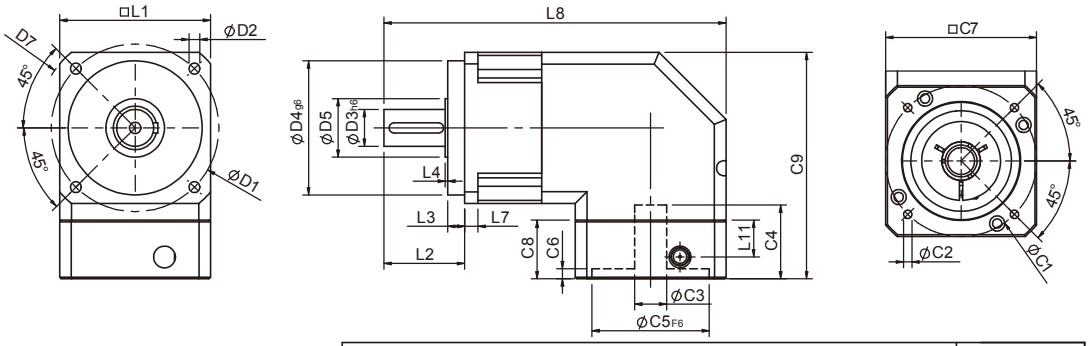

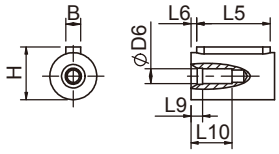

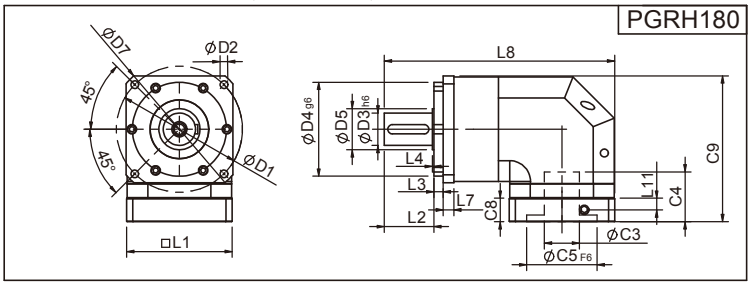

Specifications 規格

Unit:mm

尺寸 Dimensions	PGRH42	PGRH60	PGRH90	PGRH115	PGRH142	PGRH180	PGRH220
D1	50	70	100	130	165	215	250
D2	3.4	5.5	6.5	8.5	10.5	13	17
$D3_{h6}$	13	16	22	32	40	55	75
$D4_{g6}$	35	50	80	110	130	160	180
D5	15	25	35	45	50	70	114.4
D6	M4x0.7P	M5x0.8P	M8x1.25P	M12x1.75P	M16x2.0P	M20x2.5P	M20x2.5P
D7	56	80	118	148	186	239	292
L1	42.6	60	90	115	142	180	220
L2	26	37	48	63	91.5	100.5	138
L3	5.5	7	10	10	10	16	30
L4	1	1.5	1.5	3.5	2.5	2.5	3
L5	15	25	32	40	60	70	90
L6	2	2	3	5	5	6	7
L7	4	6	8	11	16	18	20
L8	103.6	148.2	204	246.5	325	392.7	490.2
L9	4	4	4.5	6	6	8	15
L10	14	16.5	20.5	30	38	48	42
L11	13.5	21.5	22	32	44.7	20	60
$C1^{2}$	46	70	90	115	145	200	215
$C2^{2}$	M4x0.7P	M5x0.8P	M6x1.0P	M8x1.25P	M8x1.25P	M12x1.75P	M12x1.75P
$C3^{2}$	≦8/≦11	≦14/≦19	≦19/≦24	≦24/≦32	≦35	≦50	≦55
$C4^{2}$	29	34	44	53	76.8	78.8	98.7
$C5^{2}{}_{F6}$	30	50	70	95	110	114.3	180
$C6^{2}$	6	5	5	6	9	6	6
$C7^{2}$	42.6	60	90	115	140	182	220
$C8^{2}$	25	33	35	48	65	40	85
$C9^{2}$	70.8	107.8	135	174.5	207	248.5	287.5
B	5	5	6	10	12	16	20
H	15	18	24.5	35	43	59	79.5

★ C1~C9是公製標準馬達連接板尺寸,請依所選用的馬達決定.

★ 本公司有權針對以上數據規格逕行設計變更不先行告知.

★ C1~C9 are motor specific dimensions(metric std shown), Size may vary according to the motor flange chosen.

★ Specification subject to change without notice.

PGRH Double Stage Dimensions-1 PGRH雙段外型尺寸圖-1

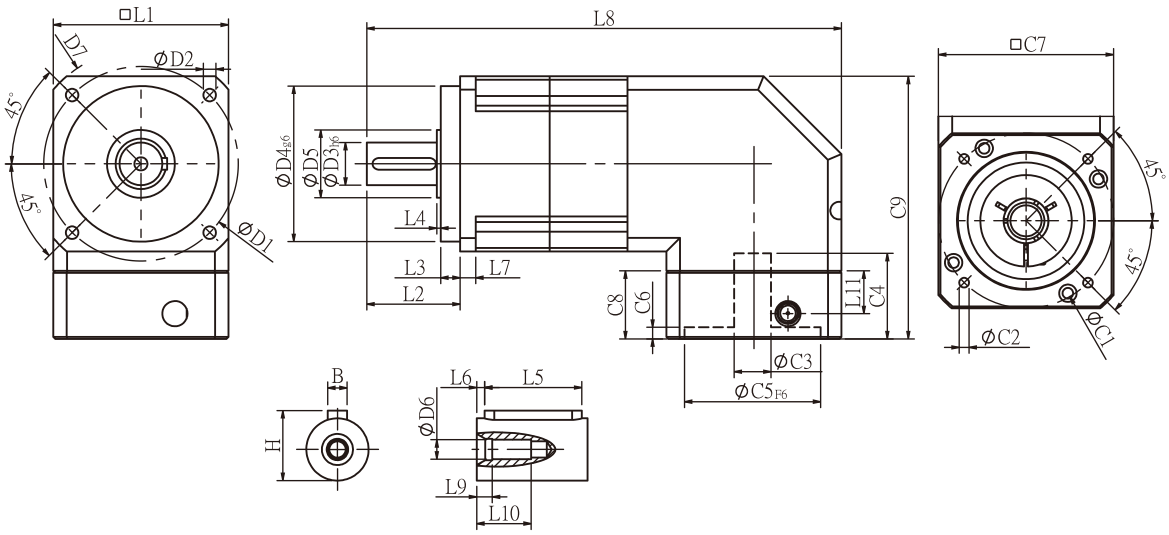

Specifications 規格

Unit:mm

尺寸 Dimensions	PGRH42	PGRH60	PGRH90
D1	50	70	100
D2	3.4	5.5	6.5
D3 h6	13	16	22
D4 g6	35	50	80
D5	15	25	35
D6	M4x0.7P	M5x0.8P	M8x1.25P
D7	56	80	118
L1	42.6	60	90
L2	26	37	48
L3	5.5	7	10
L4	1	1.5	1.5
L5	15	25	32
L6	2	2	3
L7	4	6	8
L8	130.6	181.2	248
L9	4	4	4.5
L10	14	16.5	20.5
L11	13.5	21.5	22
C1 [2]	46	70	90
C2 [2]	M4x0.7P	M5x0.8P	M6x1.0P
C3 [2]	≦8/≦11	≦14/≦19	≦19/≦24
C4 [2]	29	34	44
C5 [2] F6	30	50	70
C6 [2]	6	5	5
C7 [2]	42.6	60	90
C8 [2]	25	33	35
C9 [2]	70.8	107.8	135
B	5	5	6
H	15	18	24.5

★ C1~C9是公製標準馬達連接板尺寸,請依所選用的馬達決定.
★ 本公司有權針對以上數據規格逕行設計變更不先行告知.

★ C1~C9 are motor specific dimensions(metric std shown), Size may vary according to the motor flange chosen.
★ Specification subject to change without notice.

PGRH Double Stage Dimensions-2 PGRH雙段外型尺寸圖-2

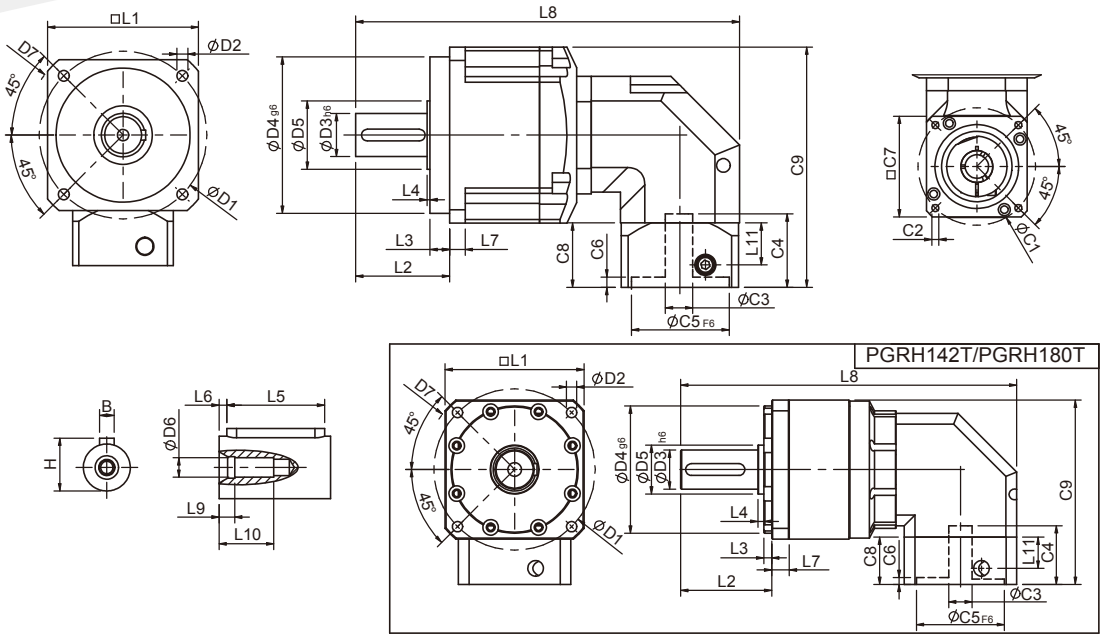

Specifications 規格

Unit:mm

尺寸 Dimensions	PGRH60T	PGRH90T	PGRH115T	PGRH142T	PGRH180T	PGRH220T
D1	70	100	130	165	215	250
D2	5.5	6.5	8.5	10.5	13	17
D3h6	16	22	32	40	55	75
D4g6	50	80	110	130	160	180
D5	25	35	45	50	70	114.4
D6	M5x0.8P	M8x1.25P	M12x1.75P	M16x2.0P	M20x2.5P	M20X2.5P
D7	80	118	148	186	239	292
L1	60	90	115	142	182	220
L2	37	48	63	91.5	100.5	138
L3	7	10	10	10	16	30
L4	1.5	1.5	3.5	2.5	2.5	3
L5	25	32	40	60	70	90
L6	2	3	5	5	6	7
L7	6	8	11	16	18	20
L8	151.8	200.7	272.5	345.5	424.5	537.2
L9	4	4.5	6	6	8	15
L10	16.5	20.5	30	38	48	42
L11	13.5	21.5	22	32	44.7	44
C1 [2]	46	70	90	115	145	200
C2 [2]	M4x0.7P	M5x0.8P	M6x1.0P	M8x1.25P	M8x1.25P	M12x1.75P
C3 [2]	≦8/≦11	≦14/≦19	≦19/≦24	≦24/≦32	≦35	≦50
C4 [2]	29	34	45.2	53.5	76.8	78.8
C5 [2] F6	30	50	70	95	110	114.3
C6 [2]	6	5	5	6	9	6
C7 [2]	42.6	60	90	115	140	180
C8 [2]	25	33	35	48	65	65
C9 [2]	79.5	122.8	147.5	188	207	267.5
B	5	6	10	12	16	20
H	18	24.5	35	43	59	79.5

★ C1~C9是公製標準馬達連接板尺寸,請依所選用的馬達決定.

★ 本公司有權針對以上數據規格逕行設計變更不先行告知.

★ C1~C9 are motor specific dimensions(metric std shown), Size may vary according to the motor flange chosen.

★ Specification subject to change without notice.

PGRH Specifications Table PGRH性能規格共表

規格 Specifications		節數 Stage	減速比 Ratio	PGRH-42	PGRH-60	PGRH-90	PGRH-115	PGRH-142	PGRH-180	PGRH-220
額定輸出力矩 T_{2N} Nominal Output Torque	N • m	1	3	19	53	145	220	380	750	950
			4	20	55	150	270	500	1000	1500
			5	17	54	140	290	600	1050	1800
			6	15	46	135	230	500	1000	1620
			7	14	44	125	270	530	960	1750
			8	12	41	110	240	470	900	1550
			9	11	37	95	220	430	800	1500
			10	17	50	130	260	530	900	1500
			14	14	44	125	270	530	960	1750
			20	11	37	95	220	430	800	1450
		節數 Stage	減速比 Ratio	PGRH-42	PGRH-60 (T)	PGRH-90(T)	PGRH-115T	PGRH-142T	PGRH-180T	PGRH-220T
		2	15	19	53	145	290	520	950	2000
			20	20	55	150	300	500	1000	2000
			25	17	54	140	290	600	1050	2000
			30	17	54	140	290	600	1050	2000
			35	17	54	140	290	600	1050	2000
			40	17	54	140	290	600	1050	2000
			45	17	54	140	290	600	1050	2000
			50	17	54	140	290	600	1050	2000
			60	15	46	135	280	560	1000	2000
			70	14	44	125	270	530	960	1750
			80	12	41	110	240	480	900	1700
			90	11	37	95	220	430	800	1500
			100	11	37	95	220	430	800	1450
			120	15	46	135	280	560	1000	1850
			140	14	44	125	270	530	960	1750
			160	12	41	110	240	480	900	1550
			180	11	37	95	220	430	800	1500
			200	11	37	95	220	430	800	1450
急停力矩 T_{2NOT} Emergency Stop Torque	N • m		3.0 倍額定輸出力矩 (3.0 times of Nominal Output Torque) (* 最大輸出力矩 Max. Output Torque T_{2B}=60% of Emergency Stop Torque)							
額定輸入轉速 n_{1N} Nominal Input Speed	rpm	1,2	3-200	5000	5000	4000	4000	3000	3000	2000
最大輸入轉速 n_{1max} Max. Input Speed	rpm	1,2	3-200	10000	10000	8000	8000	6000	6000	4000
超精密背隙 Micro Backlash P0	arcmin	1	3-20	-	-	≦3	≦2	≦2	≦2	≦2
		2	15-200	-	-	≦5	≦4	≦4	≦4	≦4
精密背隙 Precision Backlash P1	arcmin	1	3-20	≦5	≦5	≦5	≦4	≦4	≦4	≦4
		2	15-200	≦7	≦7	≦7	≦7	≦7	≦7	≦7
標準背隙 Standard Backlash P2	arcmin	1	3-20	≦7	≦7	≦7	≦6	≦6	≦6	≦6
		2	15-200	≦9	≦9	≦9	≦9	≦9	≦9	≦9
扭轉剛性Torsional Rigidity	N • m /arcmin	1,2	3-200	2.5	6	12	23	50	145	220
容許徑向力 F_{2rB} [1] Max. Radial Load	N	1,2	3-200	760	1570	2780	5340	9000	14000	31810
容許軸向力 F_{2aB} [1] Max. Axial Load	N	1,2	3-200	410	750	1870	3310	4670	6460	18530
使用溫度 Operating Temp.	°C		3-200	-10 °C ~+90 °C						
使用壽命Service Life	hr		3-200	20,000 (10,000/ 連續運轉 Continuous operation)						
效率 Efficiency	%	1	3-20	≧95%						
		2	15-200	≧92%						
重量 Weight	kg	1	3-20	1.0	2.6	6.8	13.5	25.1	42	75
		2	15-200	1.4	3.3/2.9	8.9/7.2	14.8	26.7	46	88
安裝方向 Mounting Position	-	1,2	3-200	任意方向Any direction						
噪音值 Noise Level [2]	dBA/1m	1,2	3-200	62	64	66	68	70	72	74
防護等級 Protection Class	-	1,2	3-200	IP65						
潤滑 Lubrication	-	1,2	3-200	全合成潤滑油脂 Synthetic Lubricant						

減速機轉動慣量 Inertia(J1)

節數Stage	減速比Ratio	單位unit	PGRH-42	PGRH-60	PGRH-90	PGRH-115	PGRH-142	PGRH-180	PGRH-220
1	3/4/5/7/9	Kg • cm^2	0.06	0.40	2.28	6.87	24.2	69.8	138.2
	6/8/10/14/20		0.05	0.30	1.45	4.76	14.5	50.3	103.6
節數Stage	減速比Ratio		PGRH-42	PGRH-60(T)	PGRH-90(T)	PGRH-115T	PGRH-142T	PGRH-180T	PGRH-220T
2	15/20/25/35/45		0.06	0.40(0.08)	2.28(0.72)	3.02	7.83	27.7	80.3
	others		0.05	0.30(0.06)	1.45(0.38)	1.64	5.00	15.9	55.3

* 1. 輸出轉速 100rpm 時，作用於輸出軸中心位置。Applied to the output shaft center @100rpm.
* 2. 3000rpm 空載量測。Measured at 3000 rpm with no load. These values are measured by gearbox with ratio = 10 (1-stage) or ratio = 100 (2-stage) at nominal input speed or 3000 rpm (if nominal input speed is higher than 3000 rpm) with no load.

※本公司有權對以上數據規格逕行設計變更不先行告知。The above figures/specifications are subject to change without prior notice.

Products due to human error, natural disasters or other factors lead to poor or damaged, will not be covered under warranty.
產品因人為原因或天災等因素導致不良或損壞，不在保固範圍內。

PGR SERIES

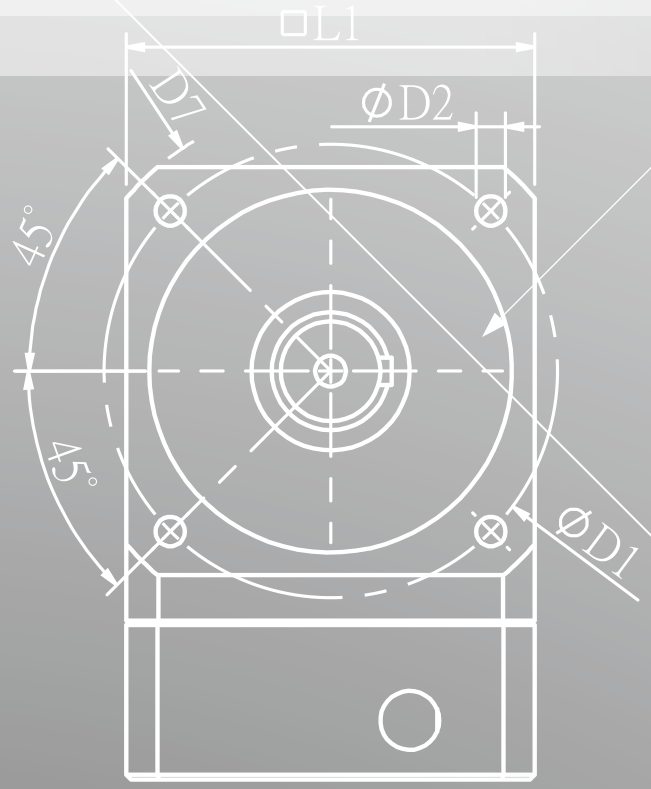

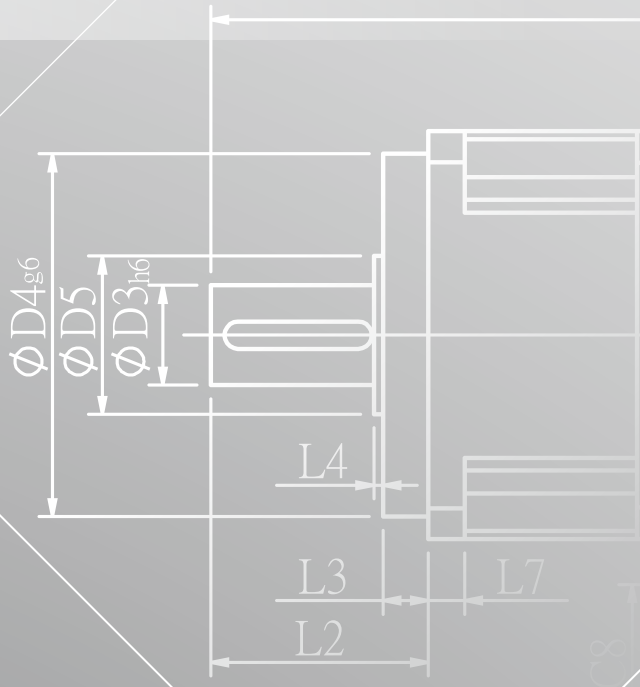

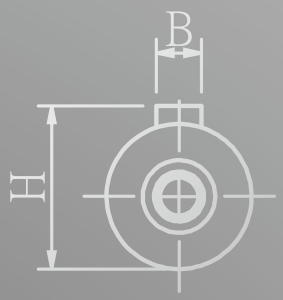

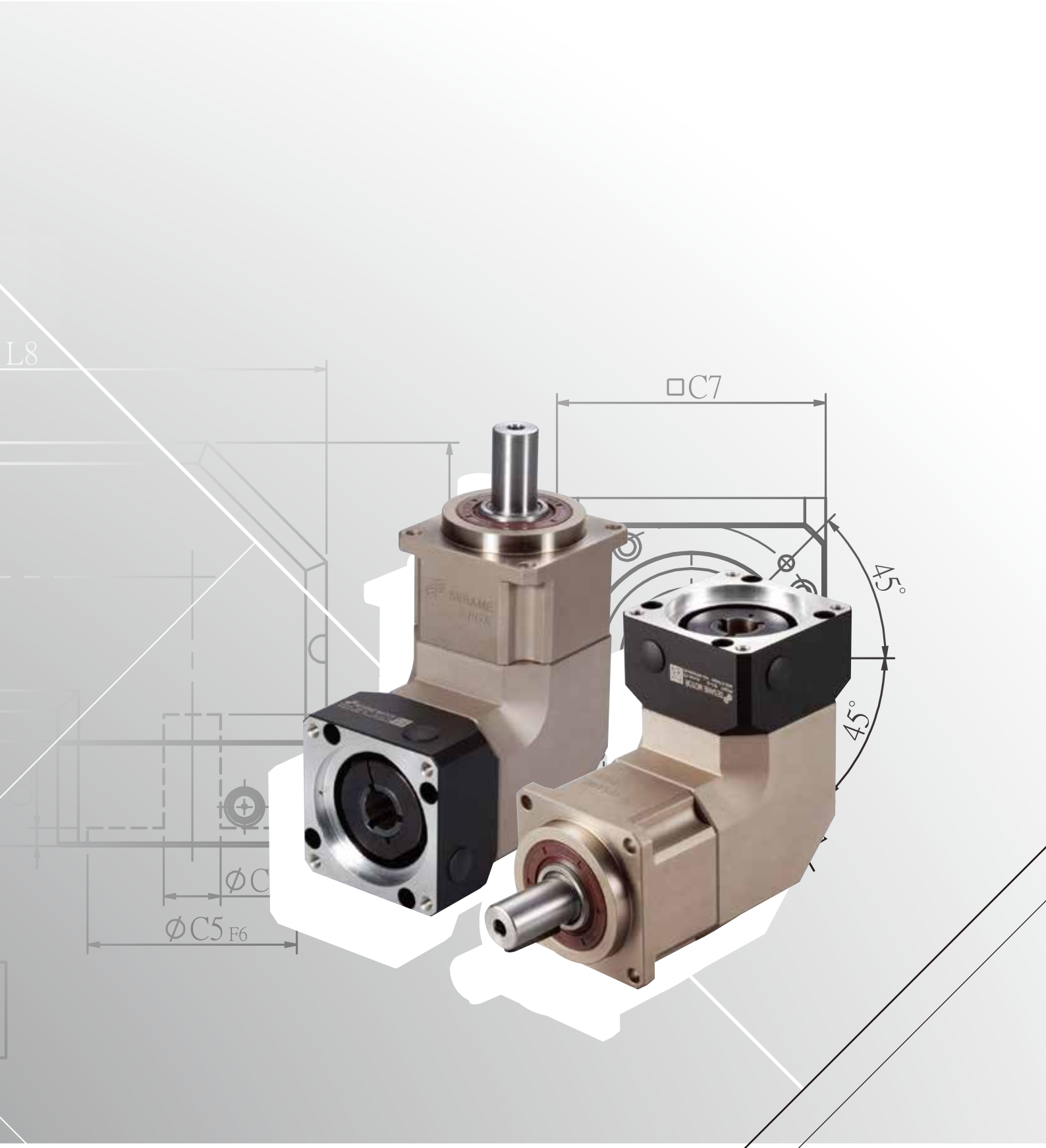
L8
□C7
45°
45°
ØC5 F6

PGR Single Stage Dimensions PGR單段外型尺寸圖

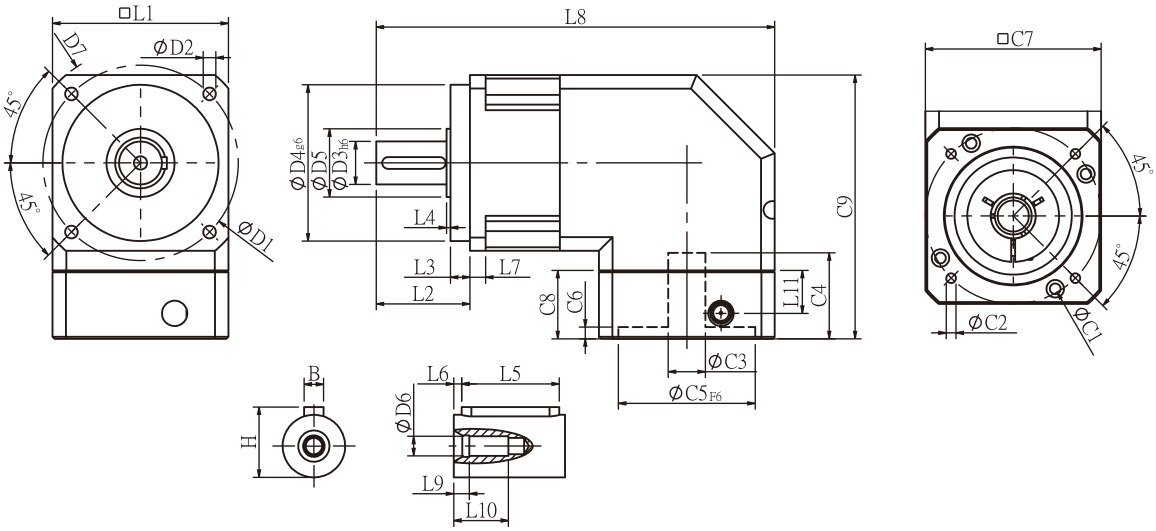

Specifications 規格

Unit:mm

尺寸 Dimensions	PGR42	PGR60	PGR90	PGR115	PGR142
D1	50	70	100	130	165
D2	3.4	5.5	6.5	8.5	10.5
D3 h6	13	16	22	32	40
D4 g6	35	50	80	110	130
D5	15	25	35	45	50
D6	M4x0.7P	M5x0.8P	M8x1.25P	M12x1.75P	M16x2.0P
D7	56	80	118	148	186
L1	42.6	60	90	115	142
L2	26	37	48	62	93
L3	5.5	7	10	8	8
L4	1.5	1.5	1.5	3	6
L5	15	25	32	40	60
L6	2	2	3	5	5
L7	4	6	8	12	18
L8	103.6	148.7	204	244.5	330
L9	4	4	4.5	6	6
L10	14	16.5	20.5	30	38
L11	13.5	21.5	22	32	44.7
C1[2]	46	70	90	115	145
C2[2]	M4x0.7P	M5x0.8P	M6x1.0P	M8x1.25P	M8x1.25P
C3[2]	≦8/≦11	≦14/≦19	≦19/≦24	≦24/≦32	≦35
C4[2]	29	34	44	53	75
C5[2] F6	30	50	70	95	110
C6[2]	6	5	5	6	9
C7[2]	42.6	60	90	115	140
C8[2]	25	33	35	48	65
C9[2]	70.8	107.8	135	174.5	207
B	5	5	6	10	12
H	15	18	24.5	35	43

★ C1~C9是公製標準馬達連接板尺寸,請依所選用的馬達決定.

★ 本公司有權針對以上數據規格逕行設計變更不先行告知.

★ C1~C9 are motor specific dimensions(metric std shown), Size may vary according to the motor flange chosen.

★ Specification subject to change without notice.

PGR Double Stage Dimensions-1 PGR雙段外型尺寸圖-1

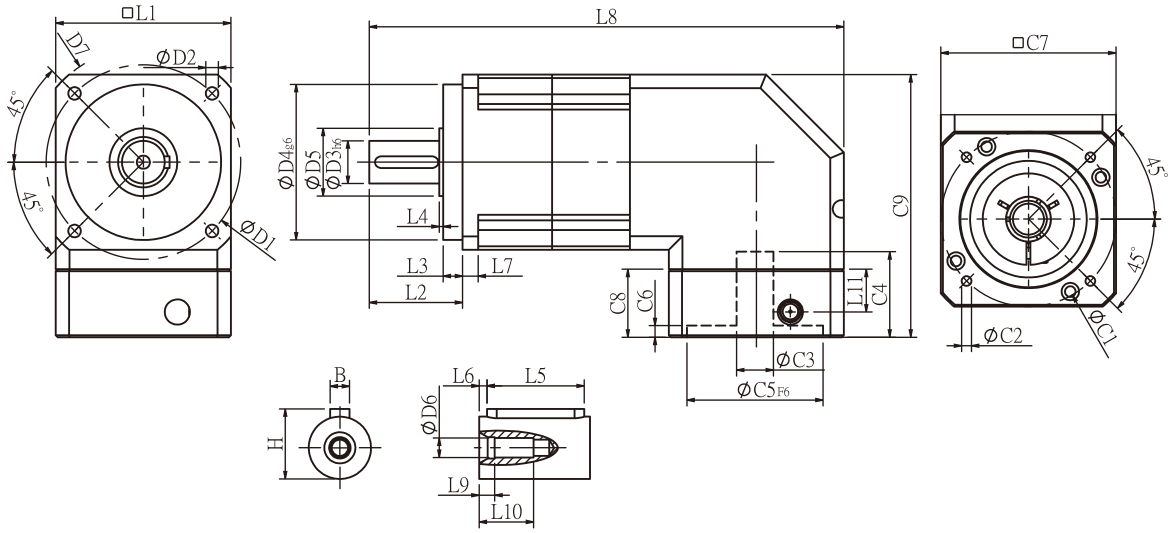

Specifications 規格

Unit:mm

尺寸 Dimensions	PGR42	PGR60	PGR90	PGR115	PGR142
D1	50	70	100	130	165
D2	3.4	5.5	6.5	8.5	10.5
D3 h6	13	16	22	32	40
D4 g6	35	50	80	110	130
D5	15	25	35	45	50
D6	M4x0.7P	M5x0.8P	M8x1.25P	M12x1.75P	M16x2.0P
D7	56	80	118	148	186
L1	42.6	60	90	115	142
L2	26	37	48	62	93
L3	5.5	7	10	8	8
L4	1.5	1.5	1.5	3	6
L5	15	25	32	40	60
L6	2	2	3	5	5
L7	4	6	8	12	18
L8	129.6	176.7	244	292.5	391
L9	4	4	4.5	6	6
L10	14	16.5	20.5	30	38
L11	13.5	21.5	22	32	44.7
C1 [2]	46	70	90	115	145
C2 [2]	M4x0.7P	M5x0.8P	M6x1.0P	M8x1.25P	M8x1.25P
C3 [2]	≦8/≦11	≦14/≦19	≦19/≦24	≦24/≦32	≦35
C4 [2]	29	34	44	53	75
C5 [2] F6	30	50	70	95	110
C6 [2]	6	5	5	6	9
C7 [2]	42.6	60	90	115	140
C8 [2]	25	33	35	48	65
C9 [2]	70.8	107.8	135	174.5	207
B	5	5	6	10	12
H	15	18	24.5	35	43

★ C1~C9是公製標準馬達連接板尺寸,請依所選用的馬達決定.

★ 本公司有權針對以上數據規格逕行設計變更不先行告知.

★ C1~C9 are motor specific dimensions(metric std shown), Size may vary according to the motor flange chosen.

★ Specification subject to change without notice.

PGR Double Stage Dimensions-2 PGR雙段外型尺寸圖-2

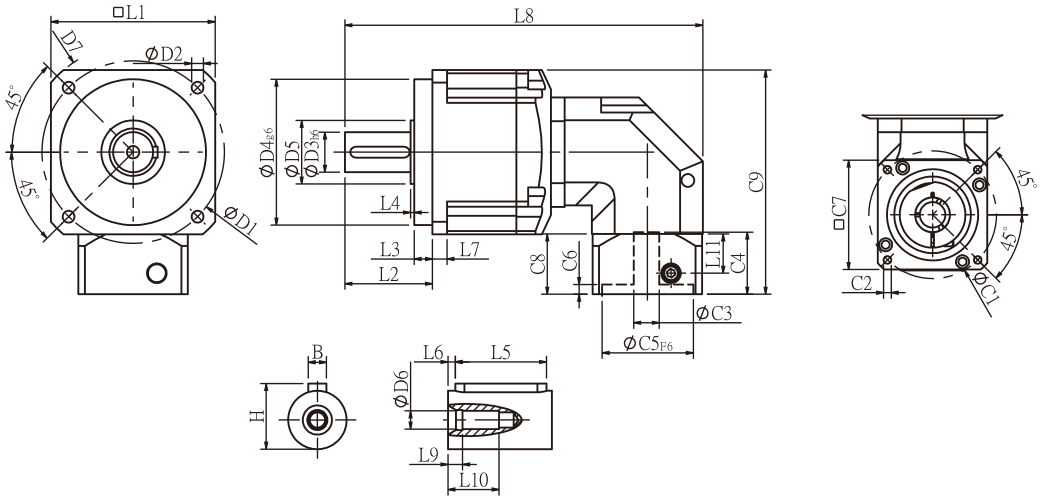

Specifications 規格

Unit:mm

尺寸 Dimensions	PGR60T	PGR90T	PGR115T	PGR142T
D1	70	100	130	165
D2	5.5	6.5	8.5	10.5
D3h6	16	22	32	40
D4g6	50	80	110	130
D5	25	35	45	50
D6	M5x0.8P	M8x1.25P	M12x1.75P	M16x2.0P
D7	80	118	148	186
L1	60	90	115	142
L2	37	48	62	93
L3	7	10	8	8
L4	1.5	1.5	3	6
L5	25	32	40	60
L6	2	3	5	5
L7	6	8	12	18
L8	145.1	196.2	269.4	343.5
L9	4	4.5	6	6
L10	16.5	20.5	30	38
L11	13.5	21.5	22	32
C1 2	46	70	90	115
C2 2	M4x0.7P	M5x0.8P	M6x1.0P	M8x1.25P
C3 2	≦8/≦11	≦14/≦19	≦19/≦24	≦24/≦32
C4 2	29	34	44	53
C5 2F6	30	50	70	95
C6 2	6	5	5	6
C7 2	42.6	60	90	115
C8 2	25	33	35	48
C9 2	79.5	122.8	147.5	188
B	5	6	10	12
H	18	24.5	35	43

★ C1~C9是公製標準馬達連接板尺寸,請依所選用的馬達決定.

★ 本公司有權針對以上數據規格逕行設計變更不先行告知.

★ C1~C9 are motor specific dimensions(metric std shown), Size may vary according to the motor flange chosen.

★ Specification subject to change without notice.

PGR Specifications Table PGR性能規格共表

規格 Specifications		節數 Stage	減速比 Ratio	PGR-42	PGR-60	PGR-90	PGR-115	PGR-142
額定輸出力矩 T_{2N} Nominal Output Torque	N · m	1	3	13.8	35.3	76.2	220	380
			4	11.9	35.9	74.6	249	450
			5	13.8	43.0	95.2	283	473
			6	12.5	39.4	90.9	220	420
			7	11.9	36.0	85.6	219	400
			8	10.9	32.4	85.0	216	363
			9	9.8	28.7	80.0	210	320
			10	13.8	43.0	95.2	260	473
		節數 Stage	減速比 Ratio	PGR-42	PGR-60 / 60T	PGR-90 / 90T	PGR-115 / 115T	PGR-142 / 142T
		2	15	13.8	44.2	95.2	283	482
			20	11.9	35.9	74.6	249	490
			25	13.8	43.0	95.2	283	473
			30	13.8	43.0	95.2	283	473
			35	13.8	43.0	95.2	283	473
			40	13.8	43.0	95.2	283	473
			45	13.8	43.0	95.2	283	473
			50	13.8	43.0	95.2	283	473
			60	12.5	39.4	90.9	266	436
			70	11.9	36.0	85.6	219	400
			80	10.9	32.4	85.0	216	363
			90	9.8	28.7	80.0	210	320
			100	10.1	25.0	75.0	210	320
急停力矩 T_{2NOT} Emergency Stop Torque	N · m		3.0 倍額定輸出力矩 (3.0 times of Nominal Output Torque) (* 最大輸出力矩 Max. Output Torque T_{2B} =60% of Emergency Stop Torque)					
額定輸入轉速 n_{1N} Nominal Input Speed	rpm	1,2	3-100	3000	3000	3000	2500	2000
最大輸入轉速 n_{1max} Max. Input Speed	rpm	1,2	3-100	6000	6000	6000	5000	4000
超精密背隙 Micro Backlash P0	arcmin	1 2	3-10 15-100	- -	- -	- -	≦4 ≦6	≦4 ≦6
精密背隙 Precision Backlash P1	arcmin	1 2	3-10 15-100	- -	- -	≦6 ≦9	≦6 ≦8	≦6 ≦8
標準背隙 Standard Backlash P2	arcmin	1 2	3-10 15-100	≦12 ≦15	≦9 ≦12	≦9 ≦12	≦9 ≦11	≦9 ≦11
扭轉剛性 Torsional Rigidity	N · m /arcmin	1,2	3-100	1.0	2.8	7.5	15.5	30
容許徑向力 F_{2rB} [1] Max. Radial Load	N	1,2	3-100	350	960	1630	3380	6150
容許軸向力 F_{2aB} [1] Max. Axial Load	N	1,2	3-100	320	900	1420	2930	5510
使用溫度 Operating Temp.	℃		3-100	-10℃ ~ +90℃				
使用壽命 Service Life	hr		3-100	20,000 (10,000/連續運轉 Continuous operation)				
效率 Efficiency	%	1 2	3-10 15-100	≧94% ≧90%				
重量 Weight	kg	1 2	3-10 15-100	1.0 1.3	2.5 3.2/2.8	6.5 8.6/6.9	13.2 17.7/14.5	24.6 29.7/26.2
安裝方向 Mounting Position	-	1,2	3-100	任意方向 Any direction				
噪音值 Noise Level [2]	dBA/1m	1,2	3-100	65	67	70	70	75
防護等級 Protection Class	-	1,2	3-100	IP65				
潤滑 Lubrication	-	1,2	3-100	全合成潤滑油脂 Synthetic Lubricant				

減速機轉動慣量 Inertia(J1)

節數 Stage	減速比 Ratio	單位 unit	PGR-42	PGR-60	PGR-90	PGR-115	PGR-142
1	3/4/5/7/9	Kg · cm²	0.06	0.40	2.28	6.87	24.2
	6/8/10		0.05	0.30	1.45	4.76	14.5
節數 Stage	減速比 Ratio		PGR-42	PGR-60(T)	PGR-90(T)	PGR-115(T)	PGR-142(T)
2	15/20/25/35/45		0.06	0.40(0.08)	2.28(0.72)	6.87(3.02)	24.2(7.83)
	others		0.05	0.30(0.06)	1.45(0.38)	4.76(1.64)	14.5(5.00)

* 1. 輸出轉速 100rpm 時，作用於輸出軸中心位置。Applied to the output shaft center @100rpm.
* 2. 3000rpm 空載量測。Measured at 3000 rpm with no load. These values are measured by gearbox with ratio = 10 (1-stage) or ratio = 100 (2-stage) at nominal input speed or 3000 rpm (if nominal input speed is higher than 3000 rpm) with no load.
* 3.PGR115T-□□-P0不適用上表。 PGR115T-□□-P0 is not applicable.

※本公司有權對以上數據規格逕行設計變更不先行告知。The above figures/specifications are subject to change without prior notice.

Products due to human error, natural disasters or other factors lead to poor or damaged, will not be covered under warranty.
產品因人為原因或天災等因素導致不良或損壞，不在保固範圍內。

PGFR SERIES


1xD8H7
ØD2
4xD6
ØD4h7
ØD1H7
ØD3h7


ØD5
8xD9
7xD6
ØD4h7
ØD1H7
ØD3h7

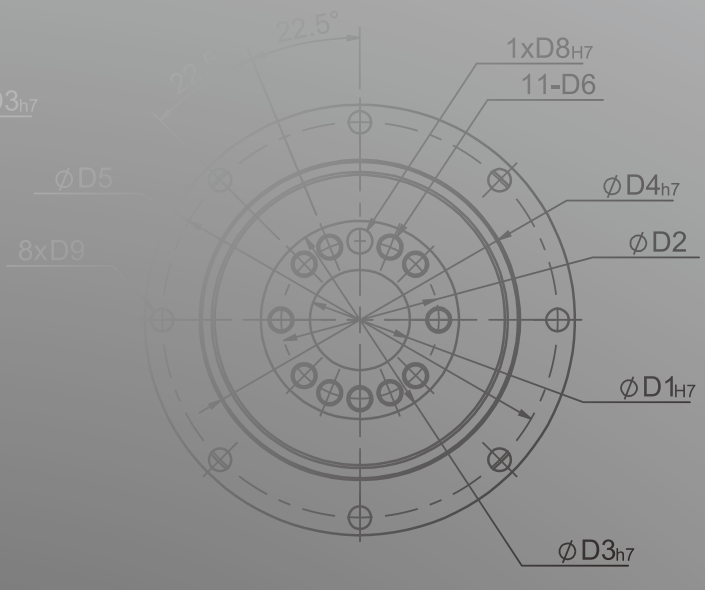
22.5°
1xD8H7
11-D6
ØD4h7
ØD2
ØD1H7
ØD3h7

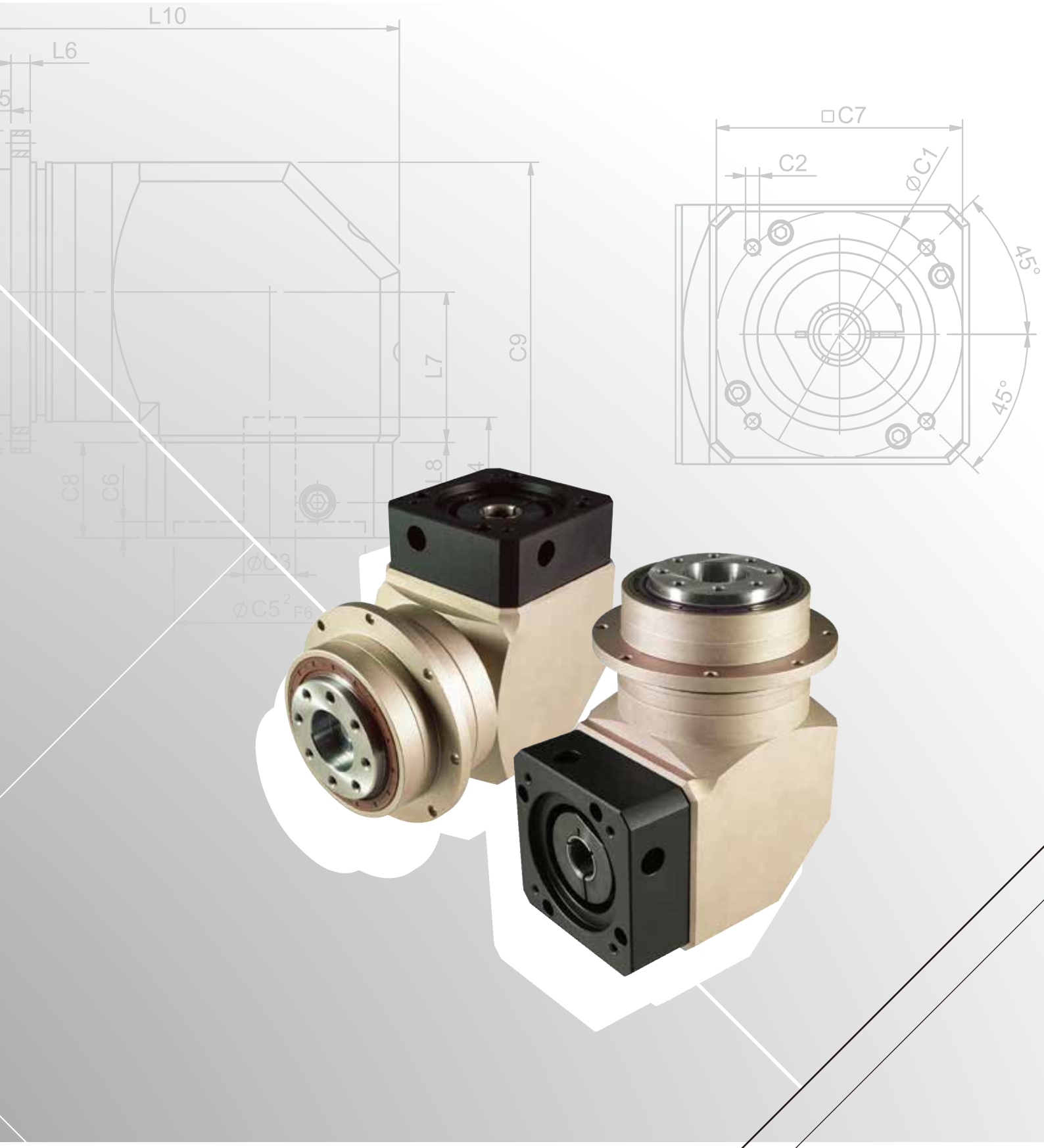
L10
L6
C9
L7
L8
C8
C6
ØC3
ØC5 2 F6
□C7
C2
ØC1
45°
45°

PGFR Single Stage Dimensions PGFR單段外型尺寸圖

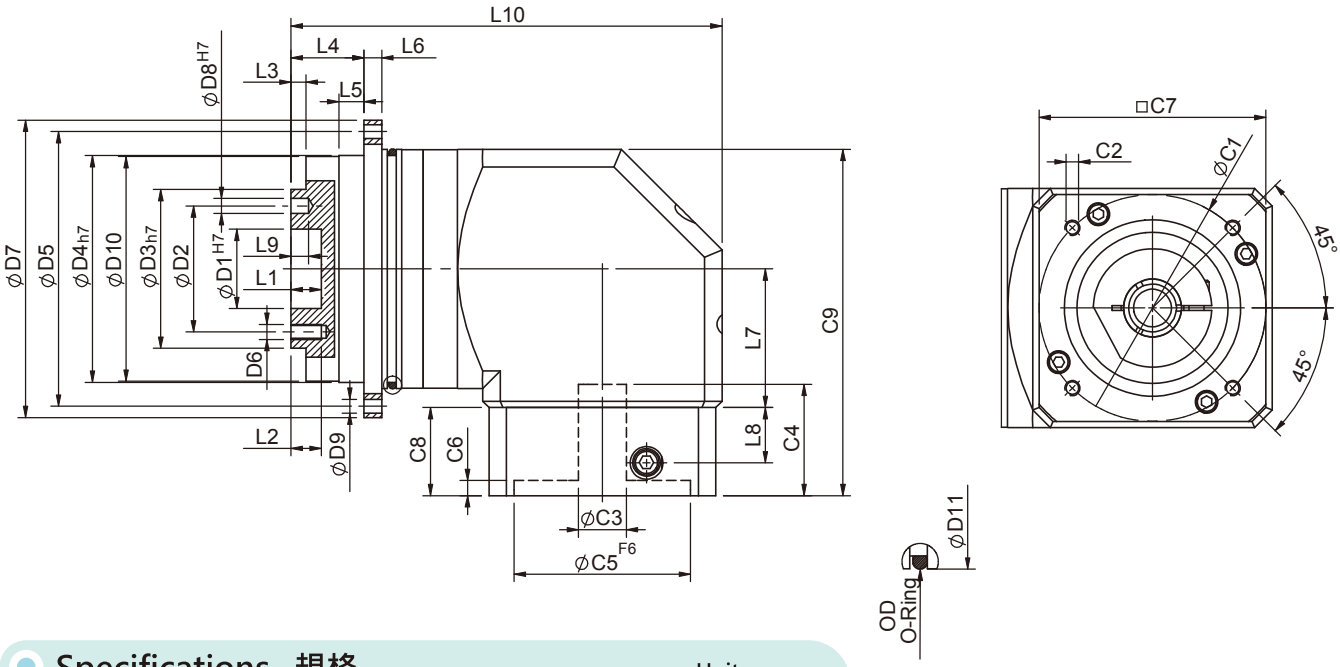

Specifications 規格

Unit:mm

尺寸 Dimensions	PGFR42	PGFR60	PGFR90	PGFR115	PGFR142
D1 H7	12	20	31.5	40	50
D2	20	31.5	50	63	80
D3 h7	28	40	63	80	100
D4 h7	47	64	90	110	140
D5	67	79	109	135	168
D6	M3x0.5P	M5x0.8P	M6x1.0P	M6x1.0P	M8x1.25P
D7	72	86	118	145	179
D8 H7	3	5	6	6	8
D9	3.4	4.5	5.5	5.5	6.6
D10	46.2	63.2	89.2	109.2	139.2
D11	60	70	95	120	152
L1	4	8	12	12	12
L2	6	7.2	12	13.5	16
L3	3	3	6	6	6
L4	19.5	19.5	29	29	38
L5	7	7	10	10	14.6
L6	4	4	7	8	10
L7	32.2	44.8	55	69	71
L8	13.5	21.5	22	32	44.7
L9	4	6	7	7	7
L10	92.2	123.9	171.1	200.2	250.7
C1 *	46	70	90	90	145
C2 *	M4x0.7P	M5x08P	M6x1.0P	M6x1.0P	M8x1.25P
C3 *	≦8/≦11	≦14/≦19	≦19/≦24	≦24/≦32	≦35
C4 *	29	34	44	53.5	76.8
C5 F6 *	30	50	70	70	110
C6 *	6	5	5	5.5	9
C7 *	42.6	60	90	115	140
C8 *	25	33	35	48	65
C9 *	78.5	112.8	137.5	176.5	225.5
OD	56x2	66x2	90x3	110x3	145x3

★ C1~C9是公製標準馬達連接板尺寸,請依所選用的馬達決定.

★ 本公司有權針對以上數據規格逕行設計變更不先行告知.

★ C1~C9 are motor specific dimensions(metric std shown), Size may vary according to motor flange.

★ Specification subject to change without notice.

PGFR Double Stage Dimensions-1 PGFR雙段外型尺寸圖-1

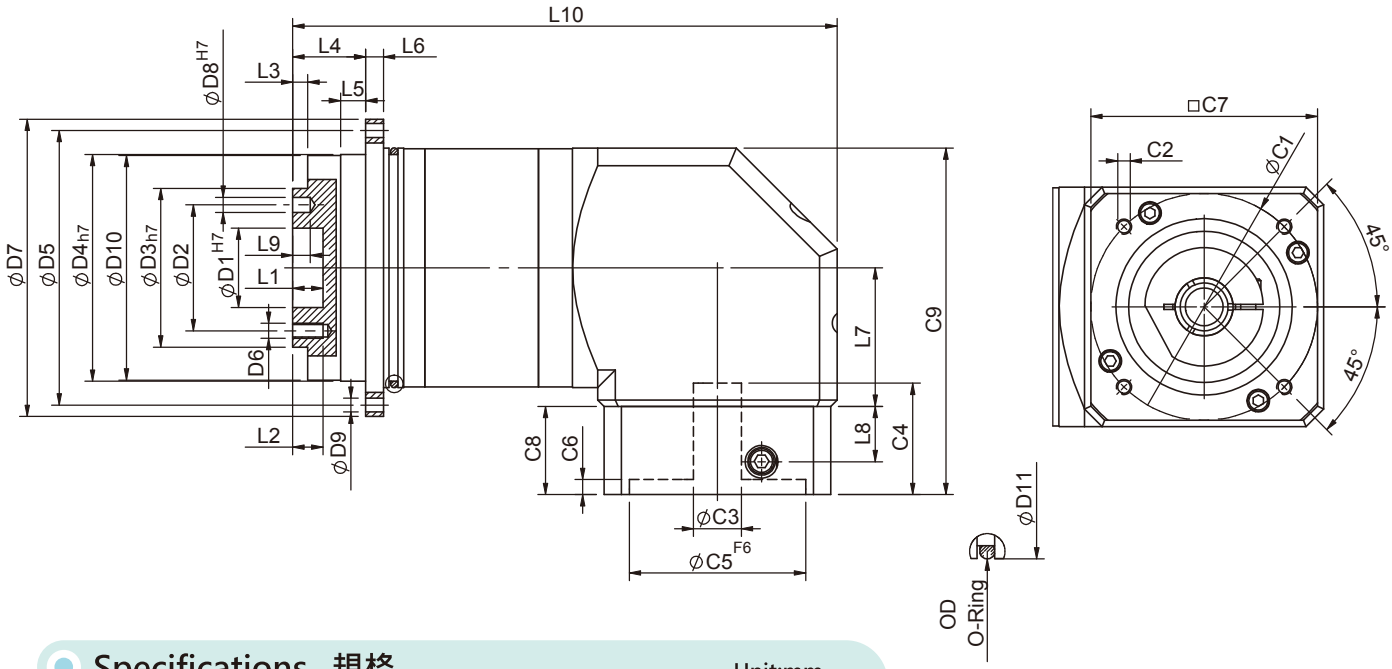

Specifications 規格

Unit:mm

尺寸 Dimensions	PGFR42	PGFR60	PGFR90
D1 H7	12	20	31.5
D2	20	31.5	50
D3 h7	28	40	63
D4 h7	47	64	90
D5	67	79	109
D6	M3x0.5P	M5x0.8P	M6x1.0P
D7	72	86	118
D8 H7	3	5	6
D9	3.4	4.5	5.5
D10	46.2	63.2	89.2
D11	60	70	95
L1	4	8	12
L2	6	7.2	12
L3	3	3	6
L4	19.5	19.5	29
L5	7	7	10
L6	4	4	7
L7	32.2	44.8	55
L8	13.5	21.5	22
L9	4	6	7
L10	119.9	159.3	216.1
C1 *	46	70	90
C2 *	M4x0.7P	M5x08P	M6x1.0P
C3 *	≦8/≦11	≦14/≦19	≦19/≦24
C4 *	29	34	44
C5 F6 *	30	50	70
C6 *	6	5	5
C7 *	42.6	60	90
C8 *	25	33	35
C9 *	78.5	112.8	137.5
OD	56x2	66x2	90x3

★ C1~C9是公製標準馬達連接板尺寸,請依所選用的馬達決定.
★ 本公司有權針對以上數據規格逕行設計變更不先行告知.

★ C1~C9 are motor specific dimensions(metric std shown), Size may vary according to motor flange.
★ Specification subject to change without notice.

PGFR Double Stage Dimensions-2 PGFR雙段外型尺寸圖-2

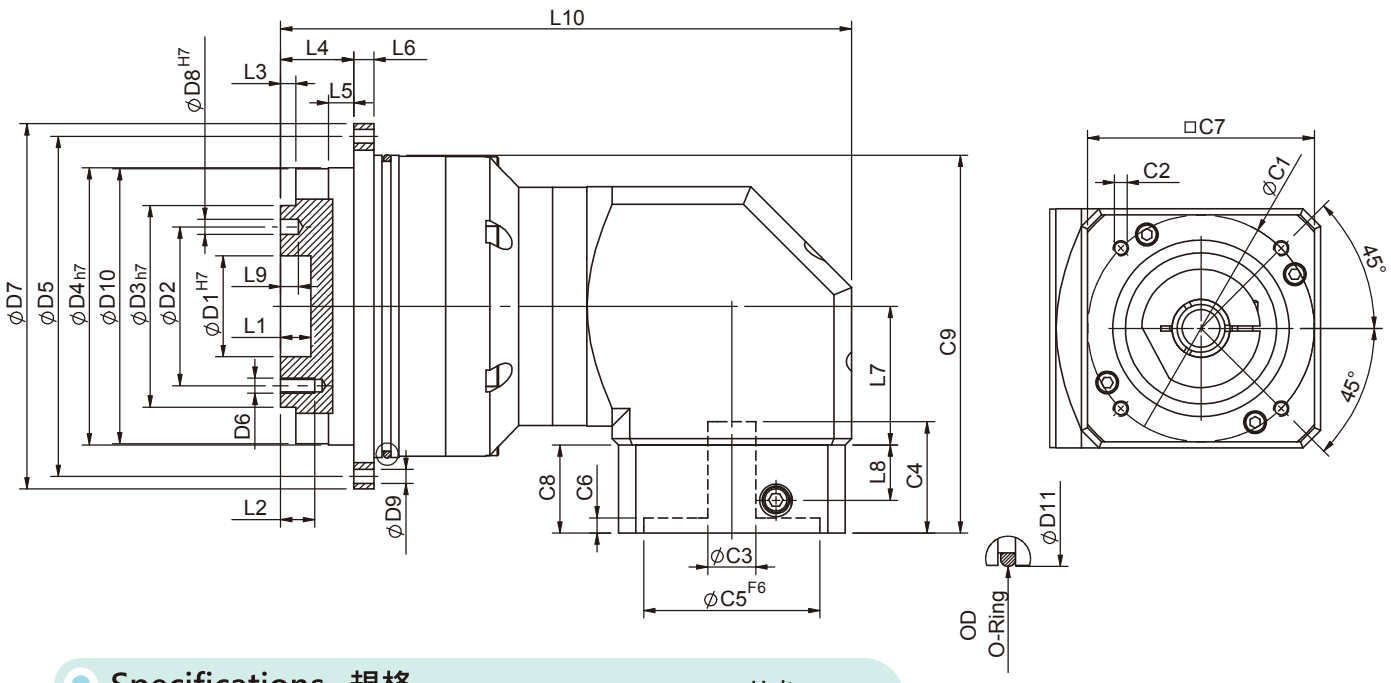

Specifications 規格

Unit:mm

尺寸 Dimensions	PGFR60T	PGFR90T	PGFR115T	PGFR142T
D1 H7	20	31.5	40	50
D2	31.5	50	63	80
D3 h7	40	63	80	100
D4 h7	64	90	110	140
D5	79	109	135	168
D6	M5x0.8P	M6x1.0P	M6x1.0P	M8x1.25P
D7	86	118	145	179
D8 H7	5	6	6	8
D9	4.5	5.5	5.5	6.6
D10	63.2	89.2	109.2	139.2
D11	70	95	120	152
L1	8	12	12	12
L2	7.2	12	13.5	16
L3	3	6	6	6
L4	19.5	29	29	38
L5	7	10	10	14.6
L6	4	7	8	10
L7	32.2	44.8	55	69
L8	13.5	21.5	22	32
L9	6	7	7	7
L10	126.6	171.3	226.6	270.7
C1 *	46	70	90	90
C2 *	M4x0.7P	M5x08P	M6x1.0P	M6x1.0P
C3 *	≦8/≦11	≦14/≦19	≦19/≦24	≦24/≦32
C4 *	29	34	44	53.5
C5 F6 *	30	50	70	70
C6 *	6	5	5	5.5
C7 *	42.6	60	90	115
C8 *	25	33	35	48
C9 *	84.4	125.3	150	176.5
OD	66x2	90x3	110x3	145x3

★ C1~C9是公製標準馬達連接板尺寸,請依所選用的馬達決定.

★ 本公司有權針對以上數據規格逕行設計變更不先行告知.

★ C1~C9 are motor specific dimensions(metric std shown), Size may vary according to motor flange.

★ Specification subject to change without notice.

PGFR Flange Dimensions PGFR法蘭面尺寸圖

PGFR42

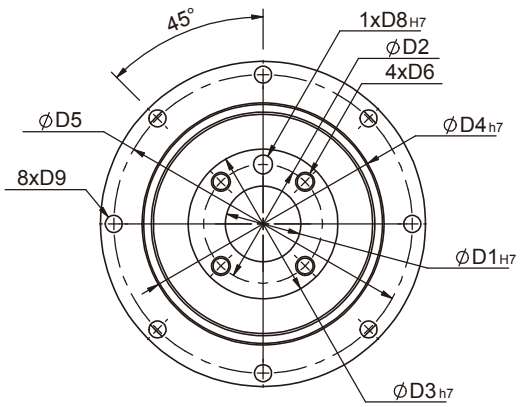

PGFR60
PGFR90

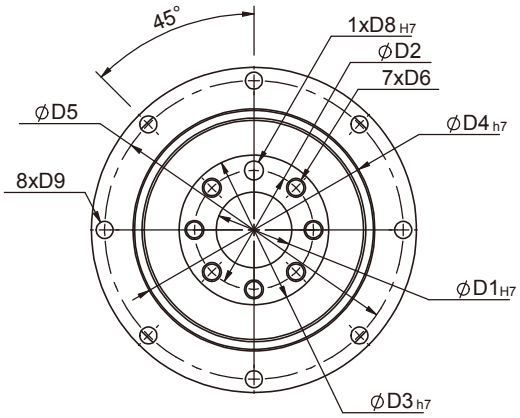

PGFR115

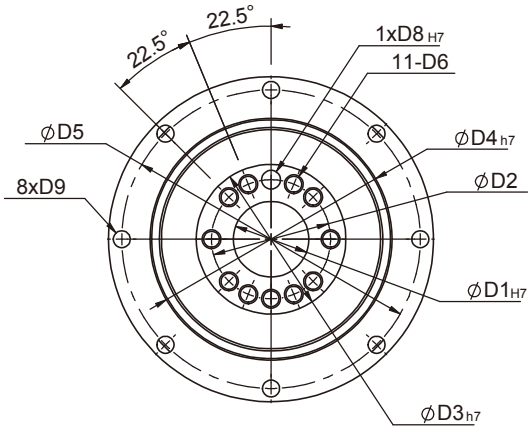

PGFR142

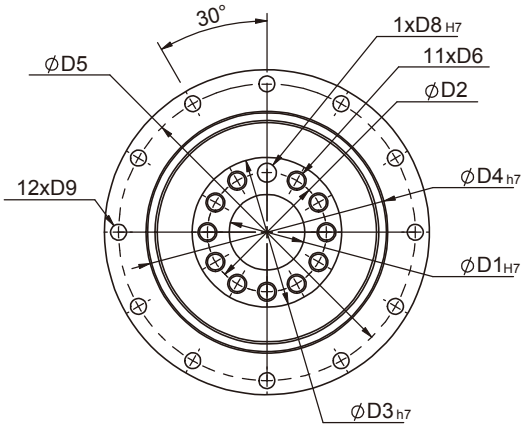

Specifications 規格

Unit:mm

尺寸 Dimensions	PGFR42	PGFR60	PGFR90	PGFR115	PGFR142
D1 H7	12	20	31.5	40	50
D2	20	31.5	50	63	80
D3 h7	28	40	63	80	100
D4 h7	47	64	90	110	140
D5	67	79	109	135	168
D6	M3x0.5P	M5x0.8P	M6x1.0P	M6x1.0P	M8x1.25P
D8 H7	3	5	6	6	8
D9	3.4	4.5	5.5	5.5	6.6

★ 本公司有權針對以上數據規格逕行設計變更不先行告知.　★ Specification subject to change without notice.

PGFR Specifications Table PGFR性能規格共表

規格 Specifications		節數 Stage	減速比 Ratio	PGFR-42	PGFR-60	PGFR-90	PGFR-115	PGFR-142
額定輸出力矩 T_{2N} Nominal Output Torque	N • m	1	3	-	40	105	180	340
			4	16	43	110	240	500
			5	17	50	130	290	600
			7	14	44	125	270	530
			10	17	50	130	260	540
			14	14	44	125	270	530
			20	11	37	95	220	430
		節數 Stage	減速比 Ratio	PGFR-42	PGFR-60/ PGFR-60T	PGFR-90/ PGFR-90T	PGFR-115T	PGFR-142T
		2	15	-	40	105	180	600
			20	16	43	110	240	600
			25	17	50	130	290	600
			30	17	40	105	180	600
			35	17	50	130	290	600
			40	16	43	110	240	600
			50	17	50	130	290	600
			70	14	44	125	270	530
			100	11	37	95	220	430
			140	14	44	125	270	530
			200	11	37	95	220	430
急停力矩 T_{2NOT} Emergency Stop Torque	N • m		3.0 倍額定輸出力矩 (3.0 times of Nominal Output Torque) (* 最大輸出力矩 Max. Output Torque T_{2B}=60% of Emergency Stop Torque)					
額定輸入轉速 n_{1N} Nominal Input Speed	rpm	1,2	3-200	5000	5000	4000	4000	3000
最大輸入轉速 n_{1max} Max. Input Speed	rpm	1,2	3-200	10000	10000	8000	8000	5000
超精密背隙 Micro Backlash P0	arcmin	1	3-20	-	-	≦4	≦2	≦2
		2	15-200	-	-	≦6	≦4	≦4
精密背隙 Precision Backlash P1	arcmin	1	3-20	≦6	≦6	≦6	≦4	≦4
		2	15-200	≦8	≦8	≦8	≦7	≦7
標準背隙 Standard Backlash P2	arcmin	1	3-20	≦8	≦8	≦8	≦6	≦6
		2	15-200	≦10	≦10	≦10	≦9	≦9
扭轉剛性Torsional Rigidity	N • m /arcmin	1,2	3-200	6	12	28	75	145
容許彎曲力矩 M_{2kB} [1] Max. Bending Moment	N • m	1,2	3-200	22.5	36	76	140	950
容許軸向力 F_{2aB} [1] Max. Axial Load	N	1,2	3-200	465	635	1060	1580	6400
使用溫度 Operating Temp.	°C		3-200	-10 °C ~+90 °C				
使用壽命Service Life	hr		3-200	20,000 (10,000/ 連續運轉 Continuous operation)				
效率 Efficiency	%	1	3-20	≧95%				
		2	15-200	≧92%				
重量 Weight	kg	1	3-20	1.1	2.2	6.3	13.5	25.1
		2	15-200	1.6	2.9/2.1	8.3/5.0	14.8	26.7
安裝方向 Mounting Position	-	1,2	3-200	任意方向 Any direction				
噪音值 Noise Level [2]	dBA/1m	1,2	3-200	62	64	66	68	70
防護等級 Protection Class	-	1,2	3-200	IP65				
潤滑 Lubrication	-	1,2	3-200	全合成潤滑油脂 Synthetic Lubricant				

減速機轉動慣量 Inertia(J1)

節數Stage	減速比Ratio	單位unit	PGFR-42	PGFR-60	PGFR-90	PGFR-115	PGFR-142
1	3/4/5/7	Kg • cm^2	0.06	0.40	2.28	6.87	24.2
	10/14/20		0.05	0.30	1.45	4.76	14.5
節數Stage	減速比Ratio		PGFR-42	PGFR-60(T)	PGFR-90(T)	PGFR-115T	PGFR-142T
2	15/20/25/35		0.06	0.40(0.08)	2.28(0.72)	3.02	7.83
	others		0.05	0.30(0.06)	1.45(0.38)	1.64	5.00

* 1. 輸出轉速 100rpm 時，作用於輸出軸中心位置。Applied to the output shaft center @100rpm.
* 2. 3000rpm 空載量測。Measured at 3000 rpm with no load. These values are measured by gearbox with ratio = 10 (1-stage) or ratio = 100 (2-stage) at nominal input speed or 3000 rpm (if nominal input speed is higher than 3000 rpm) with no load.

※本公司有權對以上數據規格逕行設計變更不先行告知。The above figures/specifications are subject to change without prior notice.

Products due to human error, natural disasters or other factors lead to poor or damaged, will not be covered under warranty.
產品因人為原因或天災等因素導致不良或損壞，不在保固範圍內。


SESAME MOTOR
SESAME MOTOR

PGF SERIES

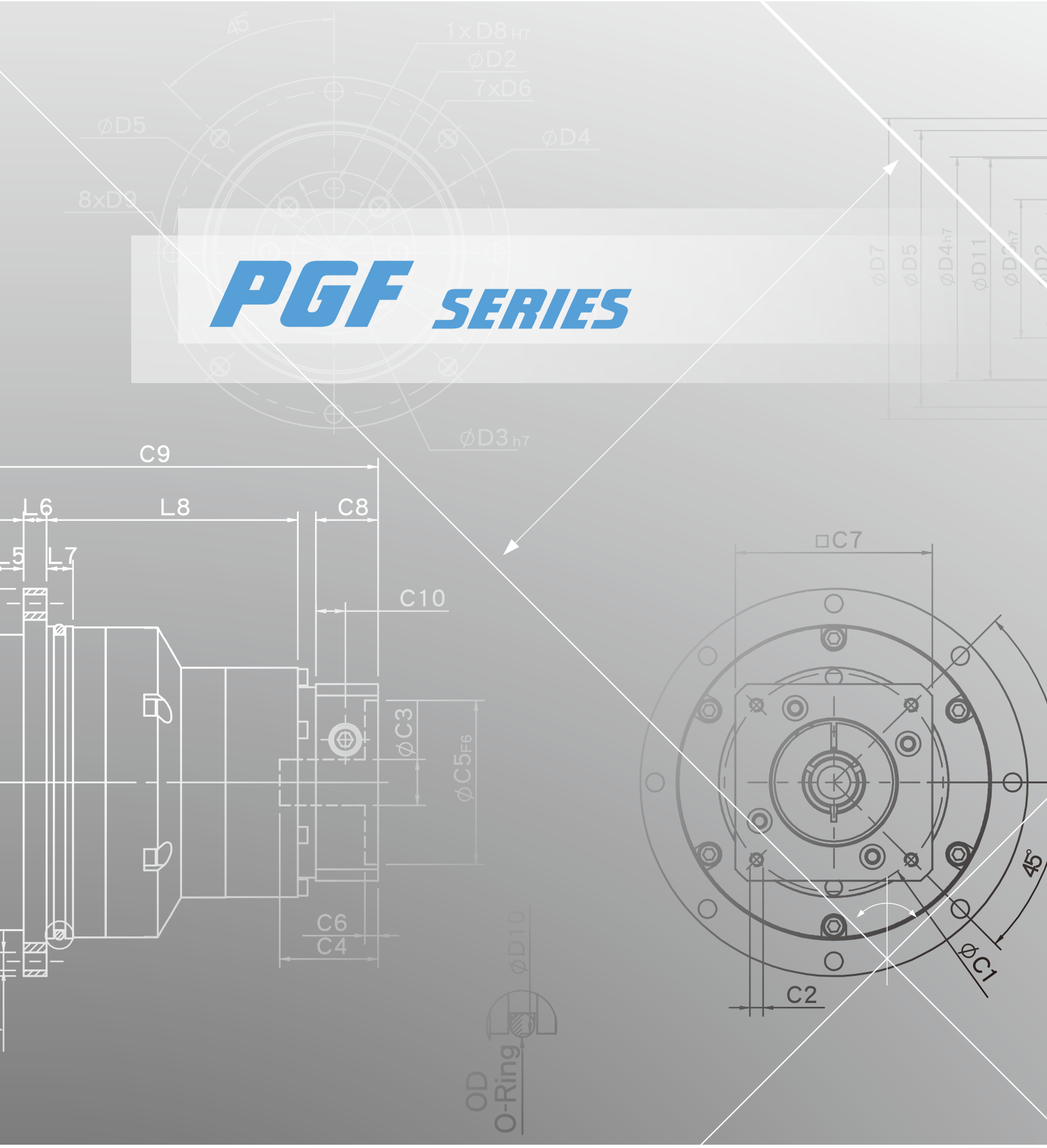

C9
L4
L6
L8
C8
L3
L5
L7
C10
L9
L1
C3
C5
D6
C6
C4
L2
D9

C7
45°
45°
C1
C2

D10
OD
O-Ring


SESAME MOTOR
SESAME
PG
SESAME MOTOR
Arcmin P2

PGF SERIES FEATURES PGF系列 產品特點

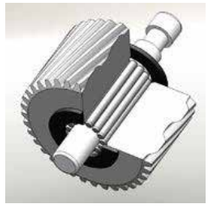

行星齒輪傳動介面採用針狀軸承，滿針排列不含保持器，以達到最大接觸面積最小間隙公差，提高結構剛性及輸出扭力。
Planet gear transmission interface equipped with needle bearings, full needle roller bearings aligned without retainer achieve maximum exposure but smallest gap tolerances. Enhance over-all gear structure rigid and output torque.

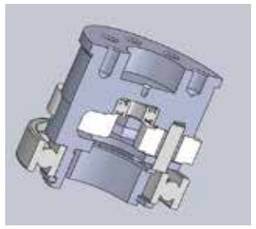

行星固定架及出力軸設計一體成型，且前後培林設定位置為大跨距，可達到最大扭轉剛性及出力軸高徑向負載能力。
Planetary arm bracket and output shaft are one-piece constructed, setting bearing apart for larger span to reach the largest reverse rigid and contribute high axis radial load capacity.

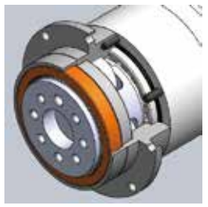

出力軸表面與油封搭配確保最低磨擦係數和減少啓動負載，保持最佳密封性，延長使用壽命且出力軸為中空穴設計，可搭配圓形法蘭面連結，大幅縮小安裝的空間。
Grinding process to smooth surface of output shaft, and with oil-seal to minimum friction coefficient and reducing start up load; result in the best seal-ability and extended lifespan. Hollow out-put shaft connects perfectly with circular flange drastically reducing the installation space.

齒輪材質選用高級合金鋼，獨特熱處理至最佳硬度，兼具表面硬度及心部韌度，並經過齒型研磨加工，以獲得最佳的精度、高耐磨耗及高耐衝擊韌性。
Alloy steel gear with unique heat treatment. Additionally, with gear grinding processing to get the best accuracy, high wear resistance and high impact toughness.

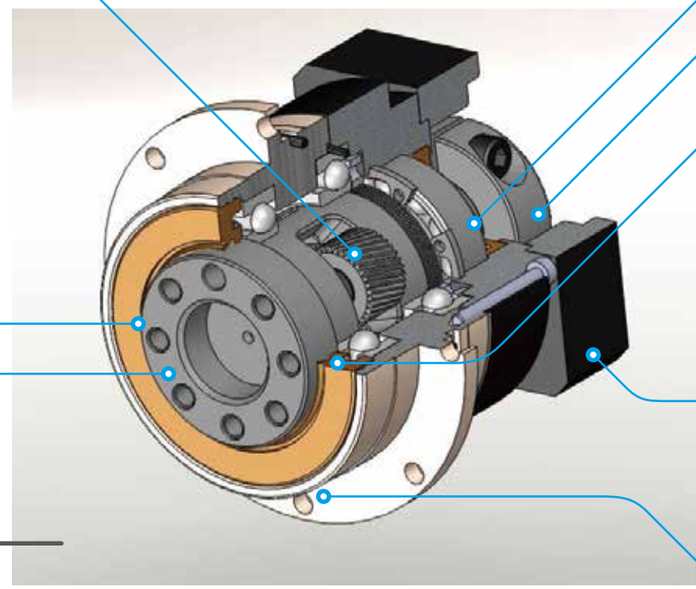

PGF系列整體設計上可容許伺服馬達高轉速的輸入，達到最大扭力輸出。出力軸為中空穴設計，可搭配圓形法蘭面連結，大幅縮小安裝的空間。精密齒輪設計及專業齒輪加工，製造出低運轉背隙、高效率、低噪音及長壽命的行星減速機。
PGF Series overall design suitable for combination operation with servo motor high-speed input and achieves maximum torque output. Hollow out-put shaft connects perfectly with circular flange drastically reducing the installation space.
Precision gear design and gear processing create a planetary gearhead with low backlash operation, high efficiency, low noise and long lifespan.

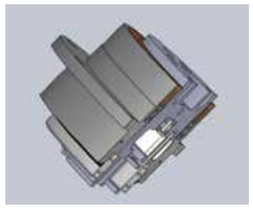

太陽齒前端軸承直接置入於行星固定架內，整體機械結構設計，以確保傳動元件的同心度。
The sun gear bearing is placed directly into the planetary arm bracket, the overall mechanical structure designed to ensure concentricity of the transmission components.

輸入端與馬達入力軸連結方法採用拴緊式機構，鎖緊環經過動平衡分析，確保高轉速下，結合介面的同心度及零滑差動力傳遞。
Input-end and motor shaft are coupled through a dynamic balanced collar clamping mechanism to ensure connection interface concentricity and zero slip power transmission at high speed.

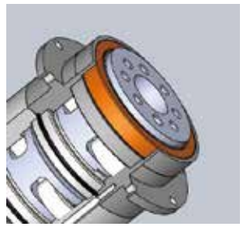

高科技油封設計上唇為防塵唇，下唇為防油唇。採IP65防護等級的密封設計，並採用高級潤滑油脂，不洩漏、免保養。
High-tech oil seal design on the upper lip guard against dust intruder, lower lip to guard against oil leak. Protection grade IP65 safeguards fully avoid leaking problem, and given it maintenance-free.

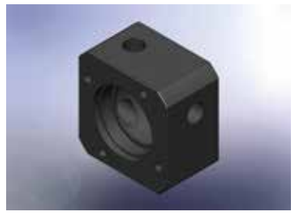

先進馬達連接板設計，配合入力軸襯套，安裝容易，可與各種廠牌之伺服、步進馬達完美搭配組合。
Advanced motor bracket design coupled with the input shaft bushing is easy to mount to any servo or stepper motor.

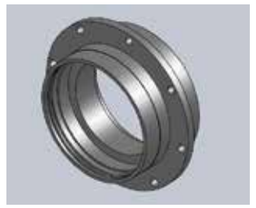

先進無電解鎳表面處理，耐刮，耐腐蝕，最適合高科技設備嚴苛要求。
本體齒箱與內環齒一體加工成形，再經德國頂級插齒機加工。具有高精密度，高扭力，耐磨耗等特點。
Advanced electroless nickel plating surface treatment resists scratch and corrosion. Suitable for stringent require of high-tech equipment.
The gear box and internal gear ring are one-piece constructed, and then processed with advanced Germany gear shaper machinery for high-precision, high torque and abrade consumption.

PGF Single Stage Dimensions PGF單段外型尺寸圖

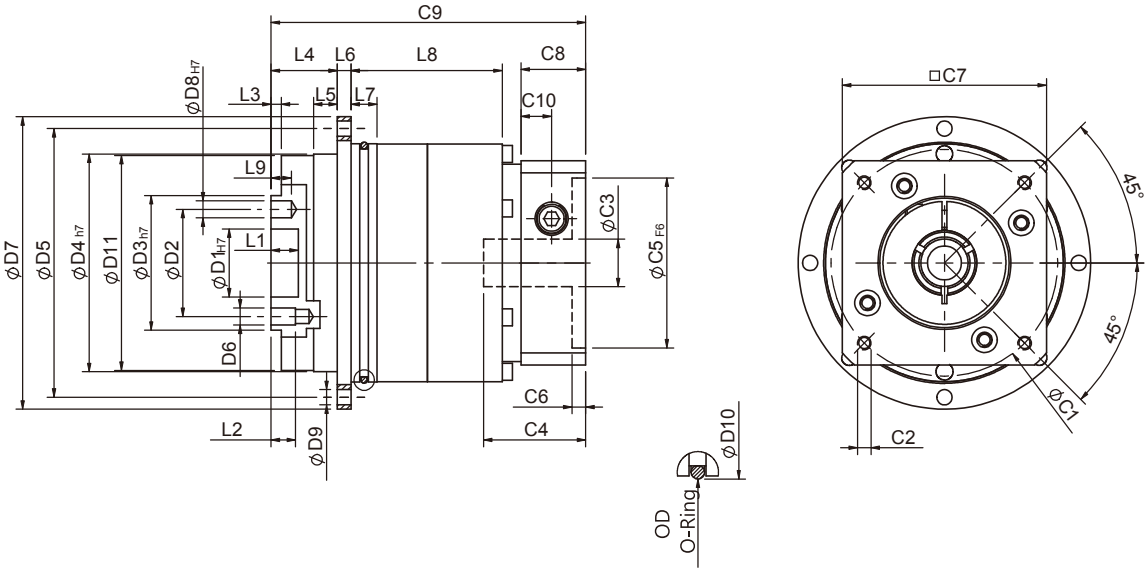

Specifications 規格

Unit:mm

尺寸 Dimensions	PGF42	PGF60	PGF90	PGF115	PGF142
D1 H7	12	20	31.5	40	50
D2	20	31.5	50	63	80
D3 h7	28	40	63	80	100
D4 h7	47	64	90	110	140
D5	67	79	109	135	168
D6	M3x0.5P	M5x0.8P	M6x1.0P	M6x1.0P	M8x1.25P
D7	72	86	118	145	179
D8 H7	3	5	6	6	8
D9	3.4	4.5	5.5	5.5	6.6
D10	60	70	95	120	152
D11	46.2	63.2	89.2	109.2	139.2
L1	4	8	12	12	12
L2	6	7.2	12	13.5	16
L3	3	3	6	6	6
L4	19.5	19.5	29	29	38
L5	7	7	10	10	14.6
L6	4	4	7	8	10
L7	5	7.7	8	10	12
L8	25	29.5	35	50.5	65
L9	4	6	7	7	7
C1 [2]	46	70	90	115	145
C2 [2]	M4x0.7P	M5x0.8P	M6x1.0P	M8x1.25P	M8x1.25P
C3 [2]	≦8/≦11	≦14/≦19	≦19/≦24	≦24/≦32/≦38	≦35/≦38
C4 [2]	28.6	37.5	41.7	51.1	66.7
C5 [2] F6	30	50	70	95	110
C6 [2]	4.1	4.5	6	6	5.5
C7 [2]	42	60	90	115	140
C8 [2]	17	20	26	30	35
C9 [2]	75.3	85.5	105	127.5	168.5
C10 [2]	7.4	9	11.3	13.9	17.8
OD	56x2	66x2	90x3	110x3	145x3

★ C1~C10是公製標準馬達連接板尺寸,請依所選用的馬達決定.

★ 本公司有權針對以上數據規格逕行設計變更不先行告知.

★ C1~C10 are motor specific dimensions(metric std shown), Size may vary according to the motor flange chosen.

★ Specification subject to change without notice.

PGF Double Stage Dimensions-1 PGF雙段外型尺寸圖-1

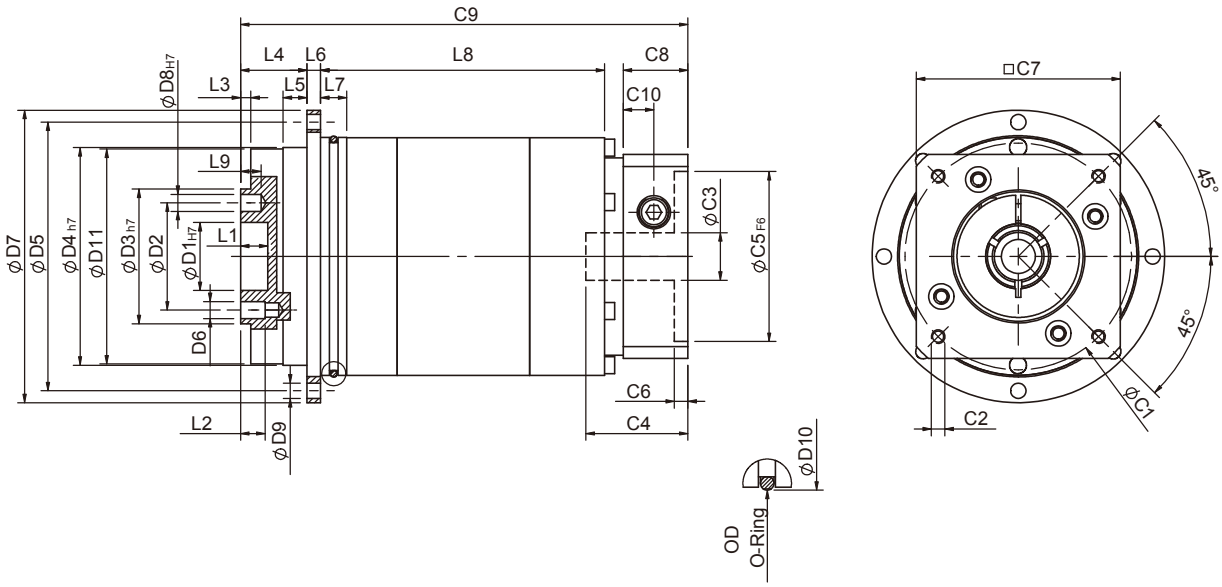

Specifications 規格

Unit:mm

尺寸 Dimensions	PGF42	PGF60	PGF90
D1 H7	12	20	31.5
D2	20	31.5	50
D3 h7	28	40	63
D4 h7	47	64	90
D5	67	79	109
D6	M3x0.5P	M5x0.8P	M6x1.0P
D7	72	86	118
D8 H7	3	5	6
D9	3.4	4.5	5.5
D10	60	70	95
D11	46.2	63.2	89.2
L1	4	8	12
L2	6	7.2	12
L3	3	3	6
L4	19.5	19.5	29
L5	7	7	10
L6	4	4	7
L7	5	7.7	8
L8	54.5	68.5	80
L9	4	6	7
C1 [2]	46	70	90
C2 [2]	M4x0.7P	M5x0.8P	M6x1.0P
C3 [2]	≦8/≦11	≦14/≦19	≦19/≦24
C4 [2]	28.6	37.5	41.7
C5 [2] F6	30	50	70
C6 [2]	4.1	4.5	6
C7 [2]	42	60	90
C8 [2]	17	20	26
C9 [2]	103	124.5	149.1
C10 [2]	7.4	9	11.3
OD	56x2	66x2	90x3

★ C1~C10是公製標準馬達連接板尺寸,請依所選用的馬達決定.
★ 本公司有權針對以上數據規格逕行設計變更不先行告知.

★ C1~C10 are motor specific dimensions(metric std shown), Size may vary according to the motor flange chosen.
★ Specification subject to change without notice.

PGF Double Stage Dimensions-2 PGF雙段外型尺寸圖-2

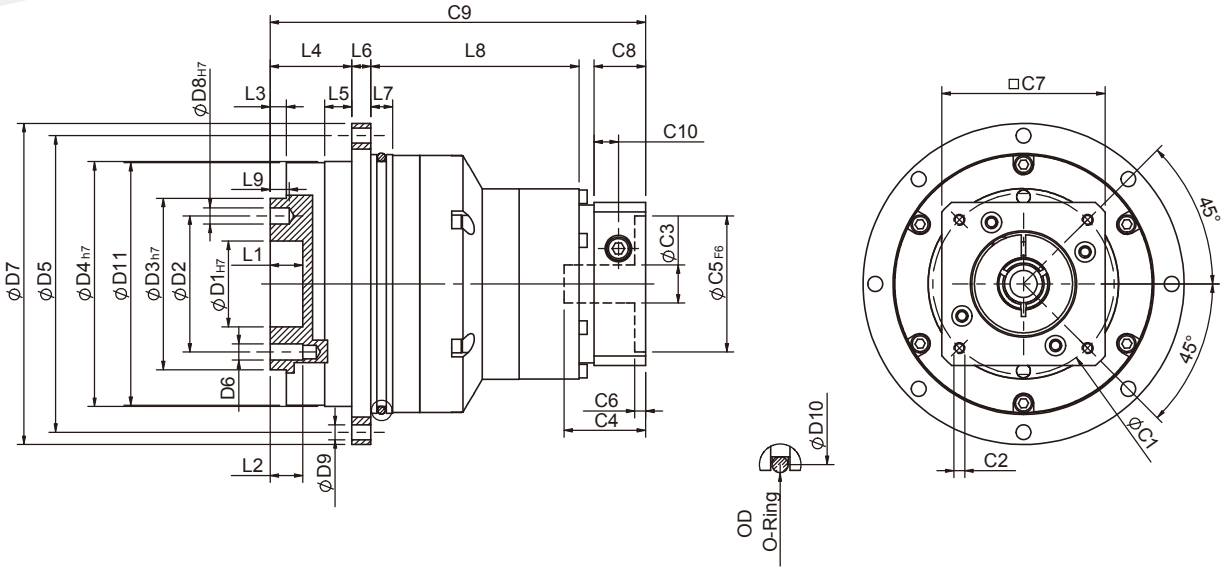

Specifications 規格

Unit:mm

尺寸 Dimensions	PGF60T	PGF90T	PGF115T	PGF142T
D1 H7	20	31.5	40	50
D2	31.5	50	63	80
D3 h7	40	63	80	100
D4 h7	64	90	110	140
D5	79	109	135	168
D6	M5x0.8P	M6x1.0P	M6x1.0P	M8x1.25P
D7	86	118	145	179
D8 H7	5	6	6	8
D9	4.5	5.5	5.5	6.6
D10	70	95	120	152
D11	63.2	89.2	109.2	139.2
L1	8	12	12	12
L2	7.2	12	13.5	16
L3	3	6	6	6
L4	19.5	29	29	38
L5	7	10	10	14.6
L6	4	7	8	10
L7	7.7	8	10	12
L8	61.2	68	89.5	110
L9	6	7	7	7
C1 [2]	46	70	90	115
C2 [2]	M4x0.7P	M5x0.8P	M6x1.0P	M8x1.25P
C3 [2]	≦8/≦11	≦14/≦19	≦19/≦24	≦24/≦32/≦38
C4 [2]	28.6	37.5	41.7	51.1
C5 [2] F6	30	50	70	95
C6 [2]	4.1	4.5	6	6
C7 [2]	42	60	90	115
C8 [2]	17	20	26	30
C9 [2]	109.7	136.5	159.6	198
C10 [2]	7.4	9	11.3	13.9
OD	66x2	90x3	110x3	145x3

★ C1~C10 是公製標準馬達連接板尺寸,請依所選用的馬達決定.

★ 本公司有權針對以上數據規格逕行設計變更不先行告知.

★ C1~C10 are motor specific dimensions(metric std shown), Size may vary according to the motor flange chosen.

★ Specification subject to change without notice.

PGF Flange Dimensions PGF法蘭面尺寸圖

PGF42

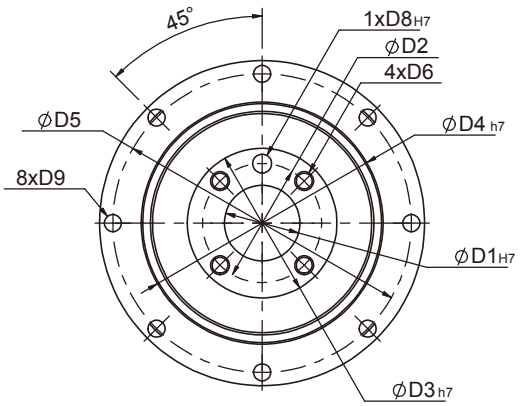

PGF60
PGF90

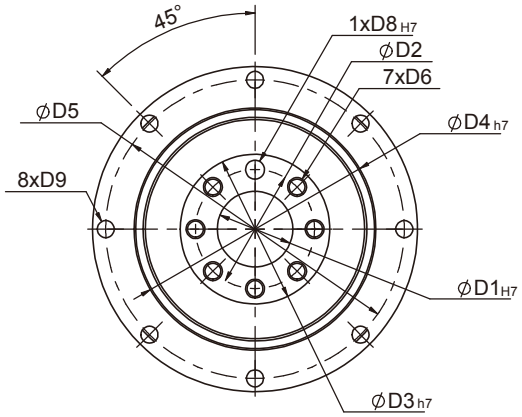

PGF115

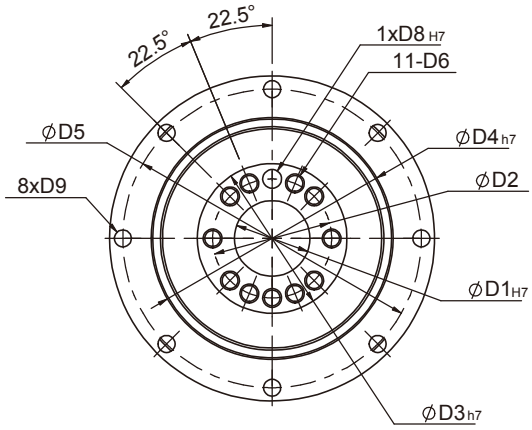

PGF142

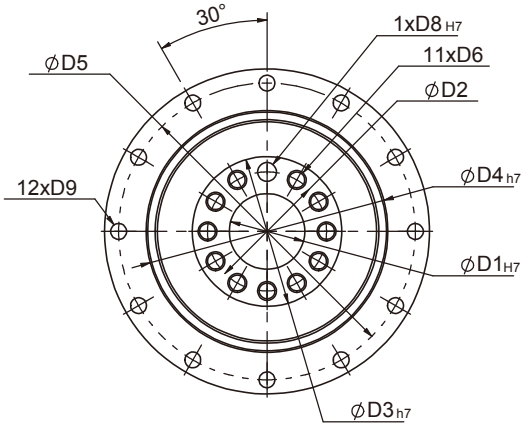

Specifications 規格

Unit:mm

尺寸 Dimensions	PGF42	PGF60	PGF90	PGF115	PGF142
D1 H7	12	20	31.5	40	50
D2	20	31.5	50	63	80
D3 h7	28	40	63	80	100
D4 h7	47	64	90	110	140
D5	67	79	109	135	168
D6	M3x0.5P	M5x0.8P	M6x1.0P	M6x1.0P	M8x1.25P
D8 H7	3	5	6	6	8
D9	3.4	4.5	5.5	5.5	6.6

★ 本公司有權針對以上數據規格逕行設計變更不先行告知. ★ Specification subject to change without notice.

PGF Specifications Table PGF性能規格共表

規格 Specifications		節數 Stage	減速比 Ratio	PGF-42	PGF-60	PGF-90	PGF-115	PGF-142
額定輸出力矩 T_{2N} Nominal Output Torque	N • m	1	3	-	40	105	180	340
			4	16	43	110	240	500
			5	17	50	130	290	600
			7	14	44	125	270	530
			10	11	37	95	220	430
		節數 Stage	減速比 Ratio	PGF-42	PGF-60(T)	PGF-90(T)	PGF-115T	PGF-142T
		2	15	-	40	105	180	600
			20	16	43	110	240	600
			25	17	50	130	290	600
			30	17	50	130	290	600
			35	17	50	130	290	600
			40	17	50	130	290	600
			50	17	50	130	290	600
			70	14	44	125	270	530
			100	11	37	95	220	430
急停力矩 T_{2NOT} Emergency Stop Torque	N • m		3.0 倍額定輸出力矩 (3.0 times of Nominal Output Torque) (* 最大輸出力矩 Max. Output Torque T_{2B}=60% of Emergency Stop Torque)					
額定輸入轉速 n_{1N} Nominal Input Speed	rpm	1,2	3-100	5000	5000	4000	4000	3000
最大輸入轉速 n_{1max} Max. Input Speed	rpm	1,2	3-100	10000	10000	8000	8000	5000
超精密背隙 Micro Backlash P0	arcmin	1	3-10	≦3	≦3	≦3	≦1	≦1
		2	12-100	≦5	≦5	≦5	≦3	≦3
精密背隙 Precision Backlash P1	arcmin	1	3-10	≦5	≦5	≦5	≦3	≦3
		2	12-100	≦7	≦7	≦7	≦5	≦5
標準背隙 Standard Backlash P2	arcmin	1	3-10	≦7	≦7	≦7	≦5	≦5
		2	12-100	≦9	≦9	≦9	≦7	≦7
扭轉剛性Torsional Rigidity	N • m /arcmin	1,2	3-100	6	12	28	75	145
容許彎曲力矩 M_{2kB} [1] Max. Bending Moment	N • m	1,2	3-100	22.5	36	76	140	950
容許軸向力 F_{2aB} [1] Max. Axial Load	N	1,2	3-100	465	635	1060	1580	6400
使用溫度 Operating Temp.	°C		3-100	-10 °C ~+90 °C				
使用壽命Service Life	hr		3-100	20,000 (10,000/ 連續運轉 Continuous operation)				
效率 Efficiency	%	1	3-10	≧97%				
		2	12-100	≧94%				
重量 Weight	kg	1	3-10	0.7	1.4	3.2	6.0	13.6
		2	12-100	1.1	2.2(1.7)	5.0(4.0)	7.9	17.9
安裝方向 Mounting Position	-	1,2	3-100	任意方向Any direction				
噪音值 Noise Level [2]	dBA/1m	1,2	3-100	56	58	60	63	65
防護等級 Protection Class	-	1,2	3-100	IP65				
潤滑 Lubrication	-	1,2	3-100	全合成潤滑油脂 Synthetic Lubricant				

減速機轉動慣量 Inertia(J1)

節數Stage	減速比Ratio	單位unit	PGF-42	PGF-60	PGF-90	PGF-115	PGF-142
1	3	Kg • cm^2	-	0.19	0.72	2.35	9.05
	4		0.02	0.18	0.67	1.66	7.17
	5		0.02	0.17	0.65	1.50	6.52
	7		0.02	0.14	0.60	1.45	6.17
	10		0.02	0.14	0.58	1.41	6.10
節數Stage	減速比Ratio		PGF-42	PGF-60(T)	PGF-90(T)	PGF-115T	PGF-142T
2	15/20/25		0.02	0.17(0.02)	0.65(0.17)	0.65	2.35
	30/35/40		0.02	0.14(0.02)	0.60(0.14)	0.60	1.45
	50/70/100		0.02	0.14(0.02)	0.58(0.14)	0.58	1.41

* 1. 輸出轉速 100rpm 時，作用於輸出軸中心位置。Applied to the output shaft center @100rpm.
* 2. 3000rpm 空載量測。Measured at 3000 rpm with no load. These values are measured by gearbox with ratio = 10 (1-stage) or ratio = 100 (2-stage) at nominal input speed or 3000 rpm (if nominal input speed is higher than 3000 rpm) with no load.

※本公司有權對以上數據規格逕行設計變更不先行告知。The above figures/specifications are subject to change without prior notice.

Products due to human error, natural disasters or other factors lead to poor or damaged, will not be covered under warranty.
產品因人為原因或天災等因素導致不良或損壞，不在保固範圍內。


SESAME MOTOR
SESAME MOTOR

PBC SERIES

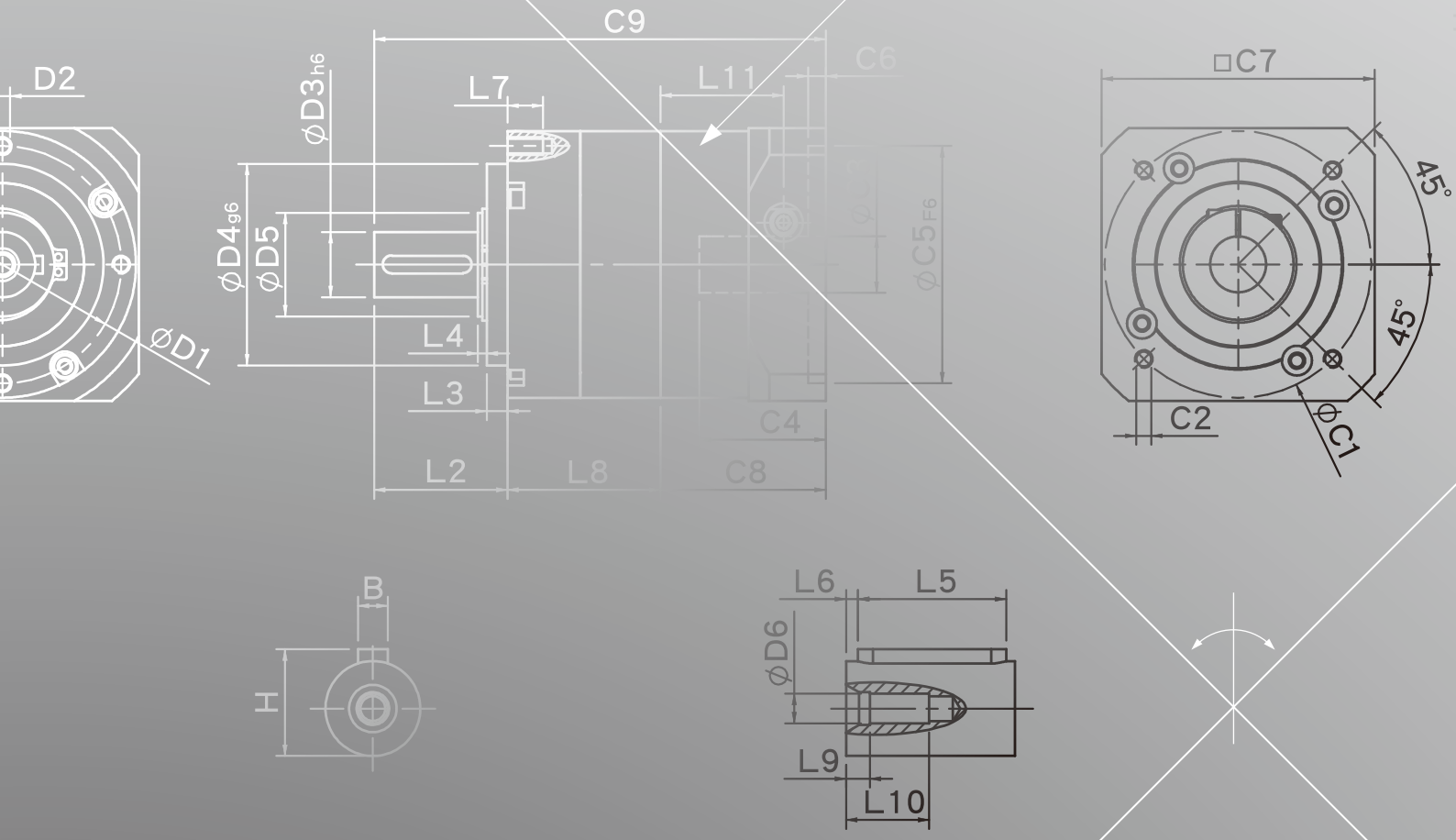
D2
ØD1
ØD3h6
ØD4g6
ØD5
C9
L7
L11
C6
ØC3
ØC5F6
L4
L3
L2
L8
C4
C8
□C7
45°
45°
C2
ØC1
B
H
L6
L5
ØD6
L9
L10

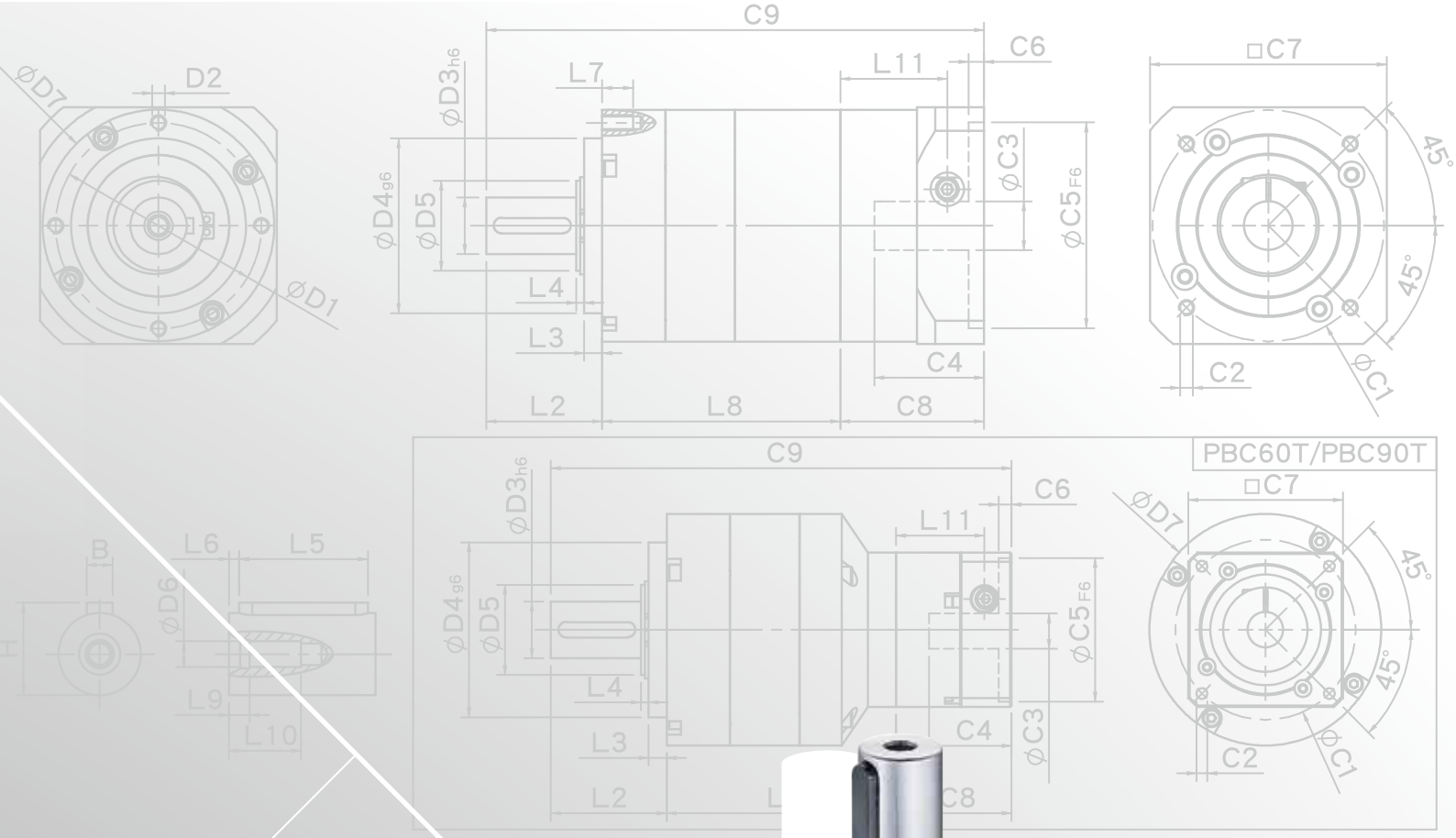
C9
C6
L11
L7
□C7
ØD7
D2
ØD3h6
ØD4g6
ØD5
ØC3
ØC5F6
45°
45°
ØD1
L4
L3
C4
C2
ØC1
L2
L8
C8
PBC60T/PBC90T
B
L6
L5
ØD6
L9
L10


SESAME
PBC
SESAME MOTOR

PBC Single Stage Dimensions PBC單段外型尺寸圖

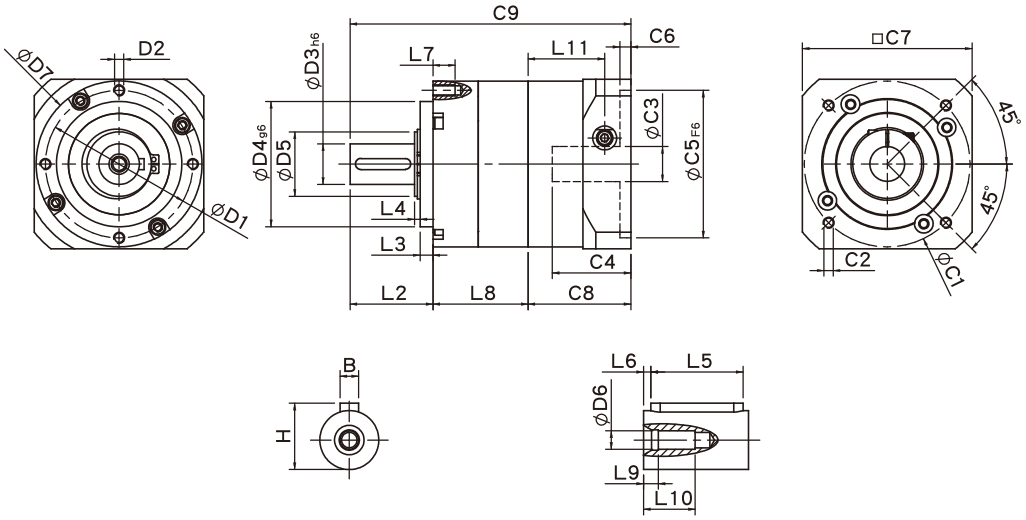

Specifications 規格

Unit:mm

尺寸 Dimensions	PBC50	PBC70	PBC90
D1	44	62	80
D2	M4x0.7P	M5x0.8P	M6x1.0P
D3 h6	12	16	22
D4 g6	35	52	68
D5	15	20	35
D6	M4x0.7P	M5x0.8P	M8x1.25P
D7	50	70	90
L2	26	36	45
L3	5.5	5	7
L4	2.6	2.7	3
L5	15	25	30
L6	2	2	3
L7	8	10	12
L8	32.4	49.6	54.4
L9	4	4	4.5
L10	14	16.5	20.5
L11	26.9	34.3	41.55
C1 [2]	46	70	90
C2 [2]	M4x0.7P	M5x0.8P	M6x1.0P
C3 [2]	≦8/≦11	≦14/≦19	≦19/≦24/≦28
C4 [2]	26.5	33.5	41
C5 [2] F6	30	50	70
C6 [2]	4	4	6
C7 [2]	42.6	60	92
C8 [2]	36.4	44.8	55.8
C9 [2]	94.8	130.4	155.2
B	4	5	6
H	13.5	18	24.5

★ C1~C9是公製標準馬達連接板尺寸,請依所選用的馬達決定.

★ 本公司有權針對以上數據規格逕行設計變更不先行告知.

★ C1~C9 are motor specific dimensions(metric std shown), Size may vary according to motor flange.

★ Specification subject to change without notice.

PBC Double Stage Dimensions PBC雙段外型尺寸圖

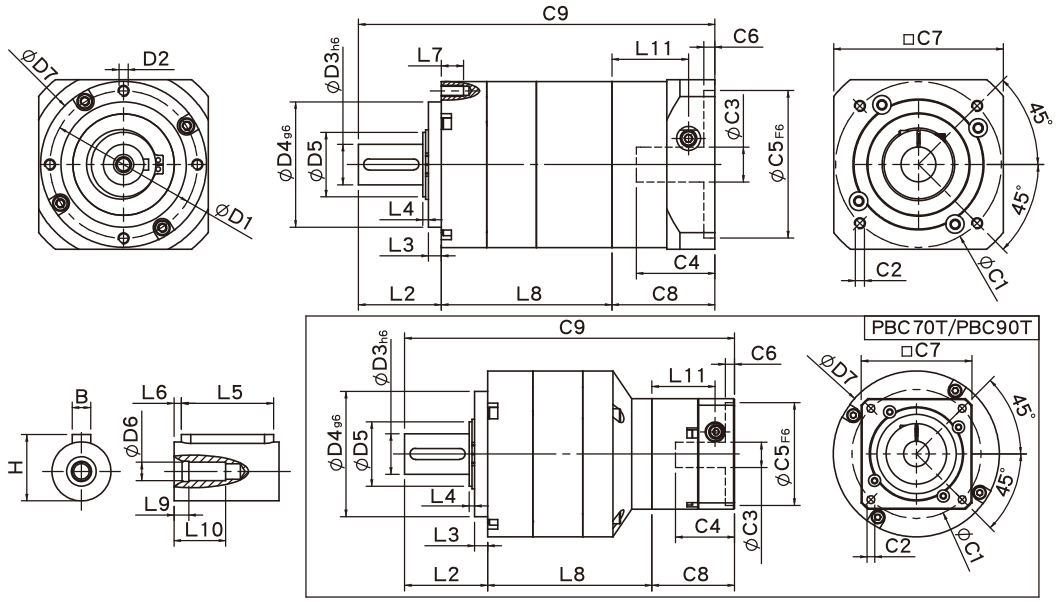

Specifications 規格

Unit:mm

尺寸 Dimensions	PBC50	PBC70	PBC70T	PBC90	PBC90T
D1	44	62		80	
D2	M4x0.7P	M5x0.8P		M6x1.0P	
D3 h6	12	16		22	
D4 g6	35	52		68	
D5	15	20		35	
D6	M4x0.7P	M5x0.8P		M8x1.25P	
D7	50	70		90	
L2	26	36		45	
L3	5.5	5		7	
L4	2.6	2.7		3	
L5	15	25		30	
L6	2	2		3	
L7	8	10		12	
L8	57.3	80.3	75.9	95.4	92
L9	4	4		4.5	
L10	14	16.5		20.5	
L11	26.9	34.3	26.9	41.55	34.3
C1 [2]	46	70	46	90	70
C2 [2]	M4x0.7P	M5x0.8P	M4x0.7P	M6x1.0P	M5x0.8P
C3 [2]	≦8/≦11	≦14/≦19	≦8/≦11	≦19/≦24/≦28	≦14/≦19
C4 [2]	26.5	33.5	26.5	41	33.5
C5 [2] F6	30	50	30	70	50
C6 [2]	4	4	4	6	4
C7 [2]	42.6	60	42.6	92	60
C8 [2]	36.4	44.8	36.4	55.8	44.8
C9 [2]	119.7	161.1	148.3	196.2	181.8
B	4	5		6	
H	13.5	18		24.5	

★ C1~C9是公製標準馬達連接板尺寸,請依所選用的馬達決定.

★ 本公司有權針對以上數據規格逕行設計變更不先行告知.

★ C1~C9 are motor specific dimensions(metric std shown), Size may vary according to motor flange.

★ Specification subject to change without notice.

PBC Triple Stage Dimensions PBC三段外型尺寸圖

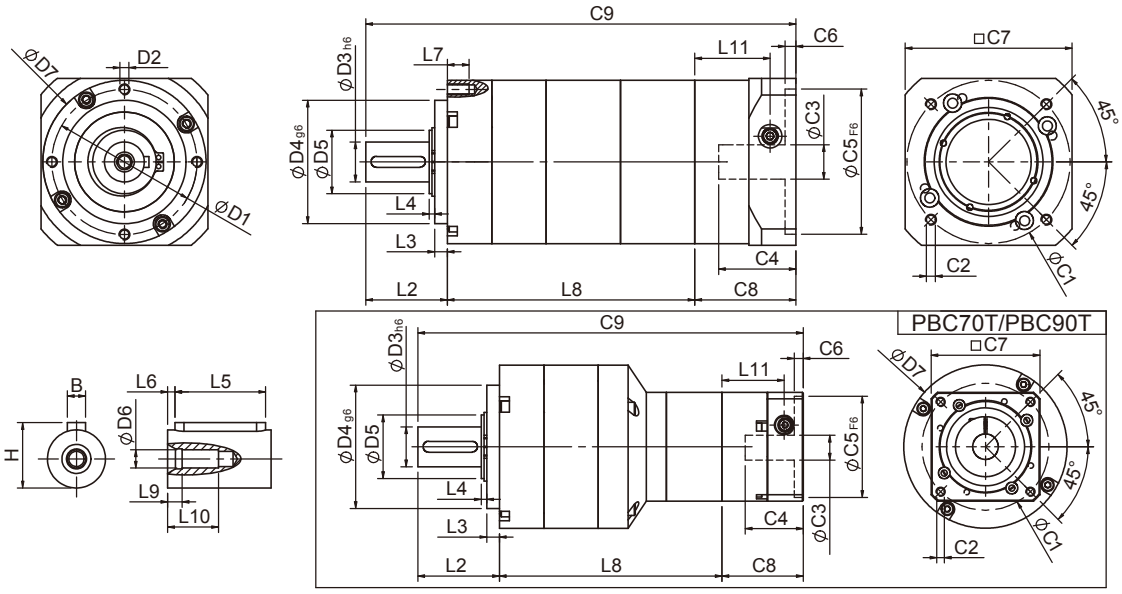

Specifications 規格

Unit:mm

尺寸 Dimensions	PBC50	PBC70T	PBC90T
D1	44	62	80
D2	M4x0.7P	M5x0.8P	M6x1.0P
$D3_{h6}$	12	16	22
$D4_{g6}$	35	52	68
D5	15	20	35
D6	M4x0.7P	M5x0.8P	M8x1.25P
D7	50	70	90
L2	26	36	45
L3	5.5	5	7
L4	2.6	2.7	3
L5	15	25	30
L6	2	2	3
L7	8	10	12
L8	82.2	100.8	122.7
L9	4	4	4.5
L10	14	16.5	20.5
L11	26.9	26.9	34.3
C1 [2]	46	46	70
C2 [2]	M4x0.7P	M4x0.7P	M5x0.8P
C3 [2]	≦8/≦11	≦8/≦11	≦14/≦19
C4 [2]	26.5	26.5	33.5
$C5^{2}_{F6}$	30	30	50
C6 [2]	4	4	4
C7 [2]	42.6	42.6	60
C8 [2]	36.4	36.4	44.8
C9 [2]	144.6	173.2	212.5
B	4	5	6
H	13.5	18	24.5

★ C1~C9是公製標準馬達連接板尺寸,請依所選用的馬達決定.

★ 本公司有權針對以上數據規格逕行設計變更不先行告知.

★ C1~C9 are motor specific dimensions(metric std shown), Size may vary according to motor flange.

★ Specification subject to change without notice.

PBC Specifications Table PBC性能規格共表

規格 Specifications		節數 Stage	減速比 Ratio	PBC-50	PBC-70	PBC-90
額定輸出力矩 T_{2N} Nominal Output Torque	N • m	1	3	4.8	13.6	33.5
			4	6.3	21.6	58.6
			5	6.0	20.5	55.1
			7	5.6	19.2	51.8
			9	5.4	18.5	50.0
			10	5.4	17.0	48.0
		節數 Stage	減速比 Ratio	PBC-50	PBC-70(T)	PBC-90(T)
		2	15	4.8	13.6	33.5
			20	6.3	21.6	58.6
			25	6.0	20.5	55.1
			35	6.0	20.5	55.1
			45	6.0	20.5	55.1
			49	5.6	19.2	51.8
			63	5.6	19.2	51.8
			81	5.4	18.5	50.0
		節數 Stage	減速比 Ratio	PBC-50	PBC-70(T)	PBC-90(T)
		3	125	6.0	20.5	55.1
			175	6.0	20.5	55.1
			225	6.0	20.5	55.1
			245	6.0	20.5	55.1
			315	6.0	20.5	55.1
			405	6.0	20.5	55.1
			567	5.6	19.2	51.8
			729	5.4	18.5	50.0
急停力矩 T_{2NOT} Emergency Stop Torque	N • m		3.0 倍額定輸出力矩 (3.0 times of Nominal Output Torque) (* 最大輸出力矩 Max. Output Torque T_{2B}=60% of Emergency Stop Torque)			
額定輸入轉速 n_{1N} Nominal Input Speed	rpm	1,2,3	3-729	4000	4000	3000
最大輸入轉速 n_{1max} Max. Input Speed	rpm	1,2,3	3-729	8000	6000	6000
背隙 Backlash	arcmin	1	3-10	≦9	≦8	≦7
		2	15-81	≦12	≦10	≦9
		3	125-729	≦15	≦12	≦12
扭轉剛性Torsional Rigidity	N • m /arcmin	1,2,3	3-729	0.8	2.0	7.0
容許徑向力 F_{2rB} [1] Max. Radial Load	N	1,2,3	3-729	540	1040	1700
容許軸向力 F_{2aB} [1] Max. Axial Load	N	1,2,3	3-729	360	720	735
使用溫度 Operating Temp.	°C	1,2,3	3-729	-10 °C ~+90 °C		
使用壽命Service Life	hr	1,2,3	3-729	20,000 (10,000/ 連續運轉 Continuous operation)		
效率 Efficiency	%	1	3-10	≧95%		
		2	15-81	≧90%		
		3	125-729	≧85%		
重量 Weight	kg	1	3-10	0.5	1.2	3.1
		2	15-81	0.7	1.7/1.5	4.7/3.6
		3	125-729	0.9	2.0/1.8	5.3/4.0
安裝方向 Mounting Position	-	1,2,3	3-729	任意方向Any direction		
噪音值 Noise Level [2]	dBA/1m	1,2,3	3-729	≦62	≦64	≦67
防護等級 Protection Class	-	1,2,3	3-729	IP64		
潤滑 Lubrication	-	1,2,3	3-729	全合成潤滑油 Synthetic Lubricant		

* 1. 輸出轉速 100rpm 時，作用於輸出軸中心位置。Applied to the output shaft center @100rpm.
* 2. 3000rpm 空載量測。Measured at 3000 rpm with no load. These values are measured by gearbox with ratio = 10 (1-stage) or ratio = 100 (2-stage) at nominal input speed or 3000 rpm (if nominal input speed is higher than 3000 rpm) with no load.
* 3. 減速機轉動慣量請參考PAE系列。The inertia value of input shaft is same as that of the PAE series.

※本公司有權對以上數據規格逕行設計變更不先行告知。The above figures/specifications are subject to change without prior notice.

Products due to human error, natural disasters or other factors lead to poor or damaged, will not be covered under warranty.
產品因人為原因或天災等因素導致不良或損壞，不在保固範圍內。

PBE SERIES

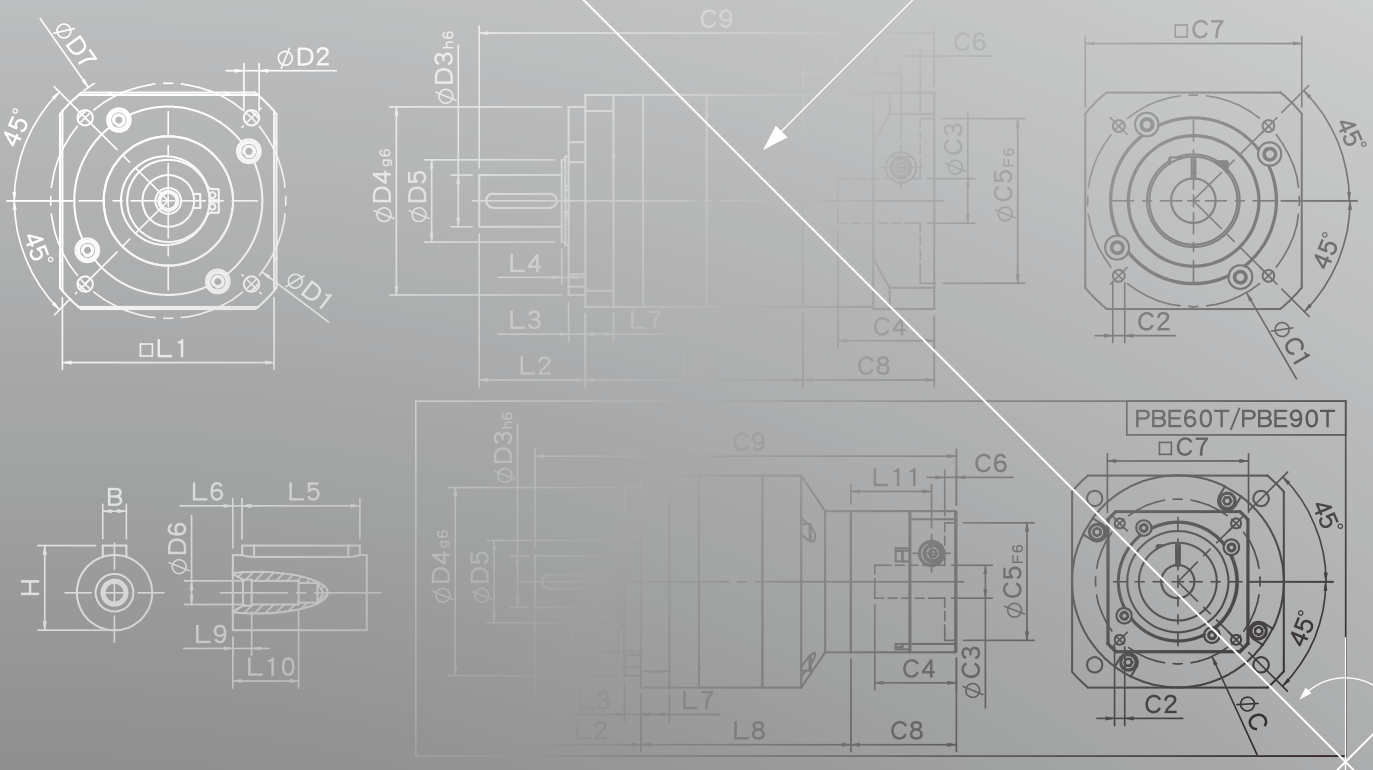
ØD7
ØD2
45°
45°
ØD1
□L1
ØD3h6
ØD4g6
ØD5
C9
C6
ØC3
ØC5F6
L4
L3
L7
L2
C4
C8
□C7
C2
ØC1
PBE60T/PBE90T
L11
ØC
B
L6
L5
ØD6
H
L9
L10

C9
C6
L11
ØD3h6
ØC3
ØD4g6
ØD5
ØC5F6
L4
L3
L7
C4
L2
L8
C8

□C7
45°
45°
C2
ØC1


L6
L5
ØD6
SESAME
SESAME MOTOR

PBE Single Stage Dimensions PBE單段外型尺寸圖

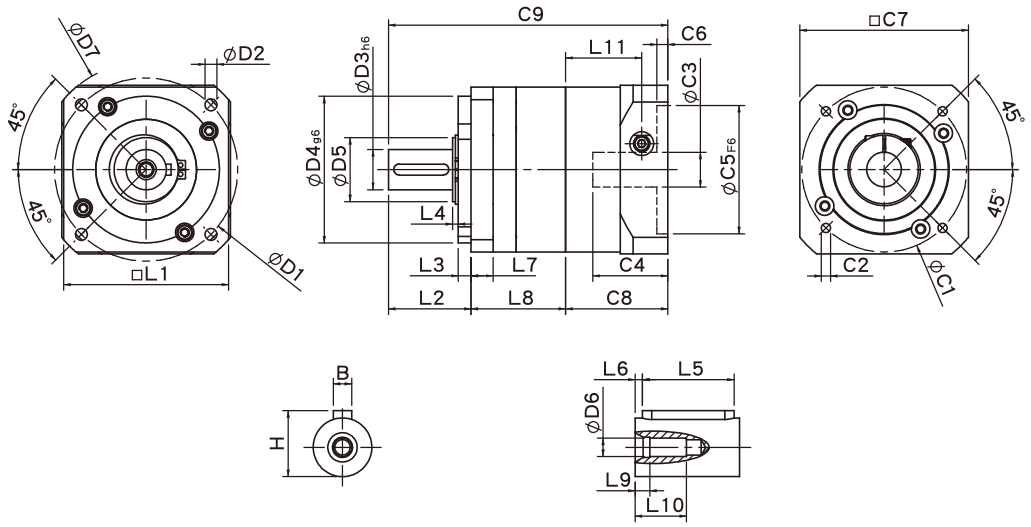

Specifications 規格

Unit:mm

尺寸 Dimensions	PBE42	PBE60	PBE90
D1	50	70	100
D2	3.4	5.5	6.5
D3 h6	13	16	22
D4 g6	35	50	80
D5	15	20	35
D6	M4x0.7P	M5x0.8P	M8x1.25P
D7	56	80	118
L1	42.6(44) [1]	60	90
L2	26	36	45
L3	5.5	5	7
L4	2.6	2.7	3
L5	15	25	30
L6	2	2	3
L7	8	10	12
L8	32.4	49.6	54.4
L9	4	4	4.5
L10	14	16.5	20.5
L11	26.9	34.3	41.5
C1 [2]	46	70	90
C2 [2]	M4x0.7P	M5x0.8P	M6x1.0P
C3 [2]	≦8/≦11	≦14/≦19	≦19/≦24/≦28
C4 [2]	26.5	33.5	41
C5 [2] F6	30	50	70
C6 [2]	4	4	6
C7 [2]	42.6	60	92
C8 [2]	36.4	44.8	55.8
C9 [2]	94.8	130.4	155.2
B	5	5	6
H	15	18	24.5

★ 註1: 10比時,L1=44.
★ C1~C9是公製標準馬達連接板尺寸,請依所選用的馬達決定.
★ 本公司有權針對以上數據規格逕行設計變更不先行告知.

★ L1=44 when gear ratio is 10.
★ C1~C9 are motor specific dimensions(metric std shown), Size may vary according to motor flange.
★ Specification subject to change without notice.

PBE Double Stage Dimensions PBE雙段外型尺寸圖

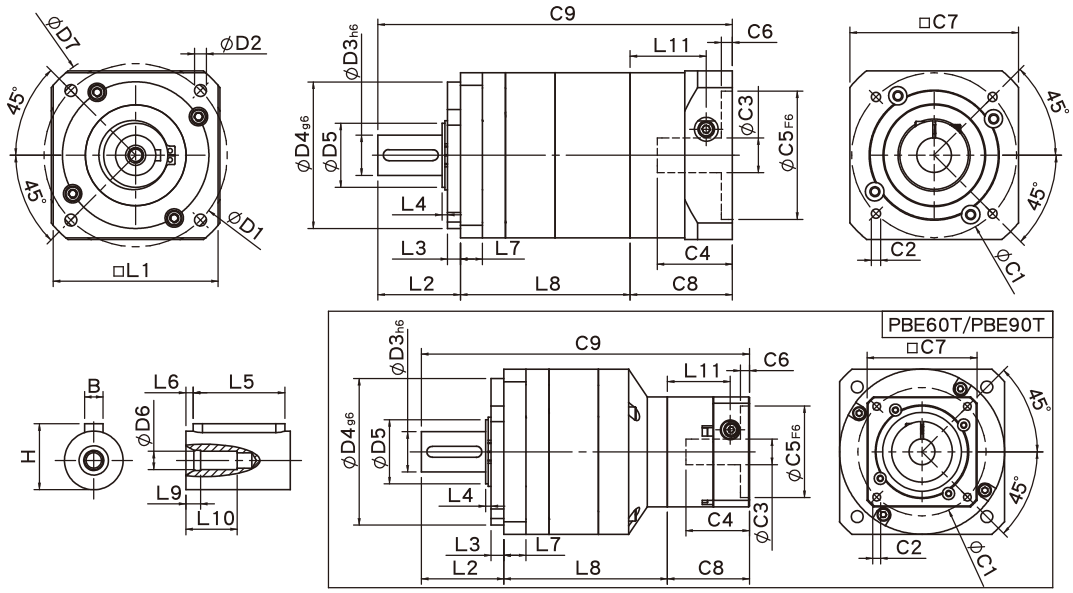

Specifications 規格

Unit:mm

尺寸 Dimensions	PBE42	PBE60/PBE60T		PBE90/PBE 90T	
D1	50	70		100	
D2	3.4	5.5		6.5	
D3 h6	13	16		22	
D4 g6	35	50		80	
D5	15	20		35	
D6	M4x0.7P	M5x0.8P		M8x1.25P	
D7	56	80		118	
L1	42.6	60		90	
L2	26	36		45	
L3	5.5	5		7	
L4	2.6	2.7		3	
L5	15	25		30	
L6	2	2		3	
L7	8	10		12	
L8	57.3	80.3	75.9	95.4	92
L9	4	4		4.5	
L10	14	16.5		20.5	
L11	26.9	34.3	26.9	41.55	34.3
C1 [2]	46	70	46	90	70
C2 [2]	M4x0.7P	M5x0.8P	M4x0.7P	M6x1.0P	M5x0.8P
C3 [2]	≦8/≦11	≦14/≦19	≦8/≦11	≦19/≦24/≦28	≦14/≦19
C4 [2]	26.5	33.5	26.5	41	33.5
C5 [2] F6	30	50	30	70	50
C6 [2]	4	4	4	6	4
C7 [2]	42.6	60	42.6	92	60
C8 [2]	36.4	44.8	36.4	55.8	44.8
C9 [2]	119.7	161.1	148.3	196.2	181.8
B	5	5		6	
H	15	18		24.5	

★ C1~C9是公製標準馬達連接板尺寸,請依所選用的馬達決定.
★ 本公司有權針對以上數據規格逕行設計變更不先行告知.

★ C1~C9 are motor specific dimensions(metric std shown), Size may vary according to motor flange.
★ Specification subject to change without notice.

PBE三段外型尺寸圖 PBE Triple Stage Dimensions

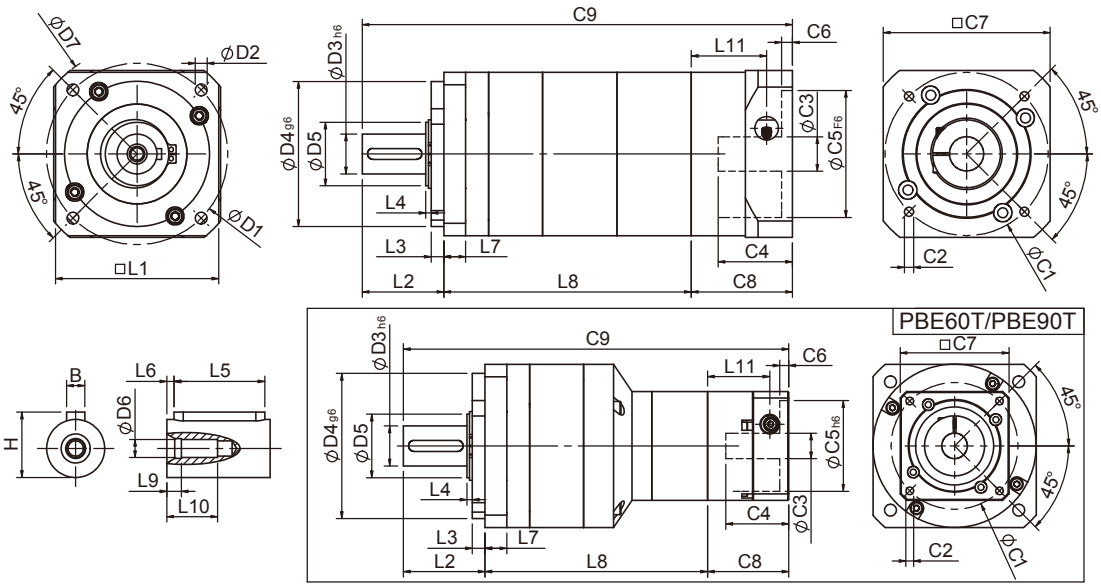

Specifications 規格

Unit:mm

尺寸 Dimensions	PBE42	PBE60T	PBE90T
D1	50	70	100
D2	3.4	5.5	6.5
D3 h6	13	16	22
D4 g6	35	50	80
D5	15	20	35
D6	M4x0.7P	M5x0.8P	M8x1.25P
D7	56	80	118
L1	42.6	60	90
L2	26	36	45
L3	5.5	5	7
L4	2.6	2.7	3
L5	15	25	30
L6	2	2	3
L7	8	10	12
L8	82.2	100.8	122.7
L9	4	4	4.5
L10	14	16.5	20.5
L11	26.9	26.9	34.3
C1 [2]	46	46	70
C2 [2]	M4x0.7P	M4x0.7P	M5x0.8P
C3 [2]	≦8/≦11	≦8/≦11	≦14/≦19
C4 [2]	26.5	26.5	33.5
C5 [2] F6	30	30	50
C6 [2]	4	4	4
C7 [2]	42.6	42.6	60
C8 [2]	36.4	36.4	44.8
C9 [2]	144.6	173.2	212.5
B	5	5	6
H	15	18	24.5

★ C1~C9是公製標準馬達連接板尺寸,請依所選用的馬達決定.

★ 本公司有權針對以上數據規格逕行設計變更不先行告知.

★ C1~C9 are motor specific dimensions(metric std shown), Size may vary according to motor flange.

★ Specification subject to change without notice.

PBE Specifications Table PBE性能規格共表

規格 Specifications		節數 Stage	減速比 Ratio	PBE-42	PBE-60	PBE-90
額定輸出力矩 T_{2N} Nominal Output Torque	N • m	1	3	4.8	13.6	33.5
			4	6.3	21.6	58.6
			5	6.0	20.5	55.1
			7	5.6	19.2	51.8
			9	5.4	18.5	50.0
			10	5.4	17.0	48.0
		節數 Stage	減速比 Ratio	PBE-42	PBE-60(T)	PBE-90(T)
		2	15	4.8	13.6	33.5
			20	6.3	21.6	58.6
			25	6.0	20.5	55.1
			35	6.0	20.5	55.1
			45	6.0	20.5	55.1
			49	5.6	19.2	51.8
			63	5.6	19.2	51.8
			81	5.4	18.5	50.0
		節數 Stage	減速比 Ratio	PBE-42	PBE-60(T)	PBE-90(T)
		3	125	6.0	20.5	55.1
			175	6.0	20.5	55.1
			225	6.0	20.5	55.1
			245	6.0	20.5	55.1
			315	6.0	20.5	55.1
			405	6.0	20.5	55.1
			567	5.6	19.2	51.8
			729	5.4	18.5	50.0
急停力矩 T_{2NOT} Emergency Stop Torque	N • m		3.0 倍額定輸出力矩 (3.0 times of Nominal Output Torque) (* 最大輸出力矩 Max. Output Torque T_{2B}=60% of Emergency Stop Torque)			
額定輸入轉速 n_{1N} Nominal Input Speed	rpm	1,2,3	3-729	4000	4000	3000
最大輸入轉速 n_{1max} Max. Input Speed	rpm	1,2,3	3-729	8000	6000	6000
背隙 Backlash	arcmin	1	3-10	≦9	≦8	≦7
		2	15-81	≦12	≦10	≦9
		3	125-729	≦15	≦12	≦12
扭轉剛性Torsional Rigidity	N • m /arcmin	1,2,3	3-729	0.8	2.0	7
容許徑向力 F_{2rB} [1] Max. Radial Load	N	1,2,3	3-729	540	1040	1700
容許軸向力 F_{2aB} [1] Max. Axial Load	N	1,2,3	3-729	360	720	735
使用溫度 Operating Temp.	°C	1,2,3	3-729	-10 °C ~+90 °C		
使用壽命Service Life	hr	1,2,3	3-729	20,000 (10,000/ 連續運轉 Continuous operation)		
效率 Efficiency	%	1	3-10	≧95%		
		2	15-81	≧90%		
		3	125-729	≧85%		
重量 Weight	kg	1	3-10	0.5	1.2	3.1
		2	15-81	0.7	1.7/1.5	4.7/3.6
		3	125-729	0.9	2.0/1.8	5.3/4.0
安裝方向 Mounting Position	-	1,2,3	3-729	任意方向Any direction		
噪音值 Noise Level [2]	dBA/1m	1,2,3	3-729	≦62	≦64	≦67
防護等級 Protection Class	-	1,2,3	3-729	IP64		
潤滑 Lubrication	-	1,2,3	3-729	全合成潤滑油 Synthetic Lubricant		

* 1. 輸出轉速 100rpm 時，作用於輸出軸中心位置。Applied to the output shaft center @100rpm.
* 2. 3000rpm 空載量測。Measured at 3000 rpm with no load. These values are measured by gearbox with ratio = 10 (1-stage) or ratio = 100 (2-stage) at nominal input speed or 3000 rpm (if nominal input speed is higher than 3000 rpm) with no load.
* 3. 減速機轉動慣量請參考PAC系列。The inertia value of input shaft is same as that of the PAC series.

※本公司有權對以上數據規格逕行設計變更不先行告知。The above figures/specifications are subject to change without prior notice.

Products due to human error, natural disasters or other factors lead to poor or damaged, will not be covered under warranty.
產品因人為原因或天災等因素導致不良或損壞，不在保固範圍內。

PAE SERIES

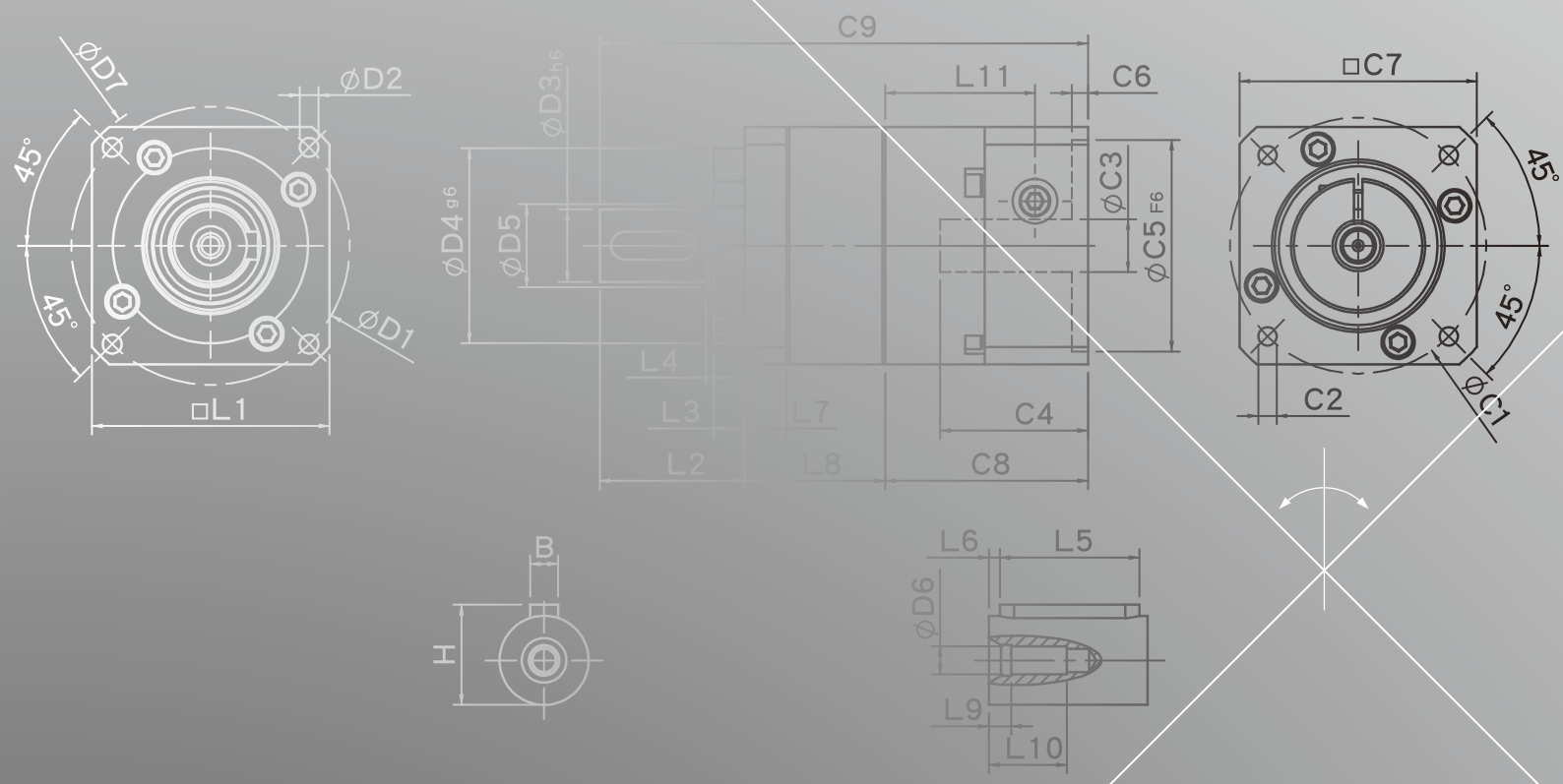
ØD7
ØD2
45°
45°
ØD1
□L1
C9
L11
C6
ØD3h6
ØD4g6
ØD5
ØC3
ØC5F6
L4
L3
L7
L2
L8
C4
C8
□C7
45°
45°
C2
ØC1
B
H
L6
L5
ØD6
L9
L10


PAE60T/PAE90T
C9
C6
C2
L11
ØD3h6
ØD4g6
ØD5
ØC3
ØC5F6
ØC1
ØD7
ØD2
ØD1
45°
L4
L3
L7
L2
L8
C4
C8
□L1
□C7
L6
L5
L9
L10
H
SESAME
PAE
SESAME MOTOR

PAE Single Stage Dimensions PAE單段外型尺寸圖

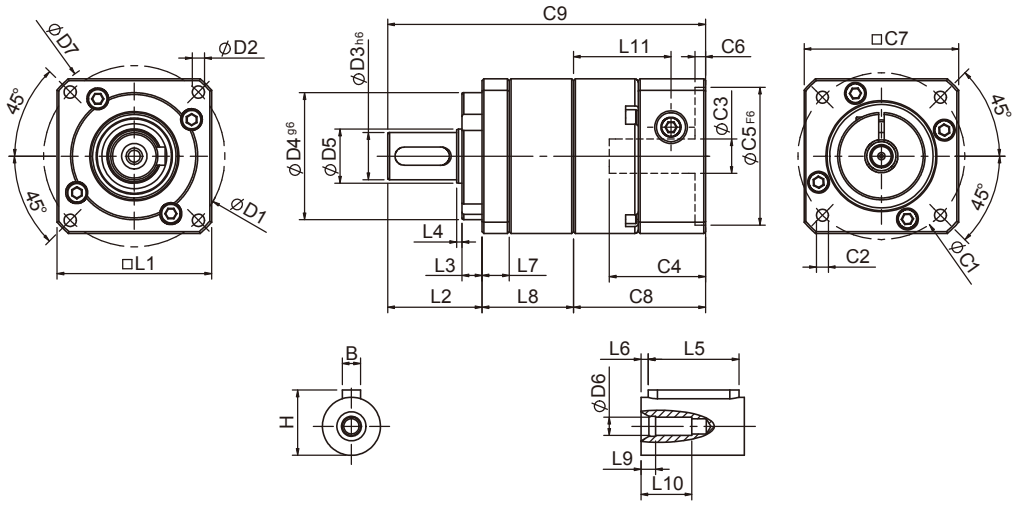

Specifications 規格

Unit:mm

尺寸 Dimensions	PAE42	PAE60	PAE90	PAE115
D1	50	70	100	130
D2	3.4	5.5	6.5	9
D3 h6	13	16	22	32
D4 g6	35	50	80	110
D5	15	20	35	45
D6	M4x0.7P	M5x0.8P	M8x1.25P	M12x1.75P
D7	56	80	118	148
L1	42.6(44)	60	90	115
L2	26	37	48	65
L3	5.5	7	10	12
L4	1.5	1.5	1.5	2
L5	15	25	32	40
L6	2	2	3	5
L7	7.3	10	12	16
L8	25	36.3	41.8	60.3
L9	4	4	4.5	6
L10	14	16.5	20.5	30
L11	26.9	34.3	41.5	51.5
C1 [2]	46	70	90	145
C2 [2]	M4x0.7P	M5x0.8P	M6x1.0P	M8x1.25P
C3 [2]	≦8/≦11	≦14/≦19	≦19/≦24/≦28	≦24/≦32/≦38
C4 [2]	26.5	33.5	41	51.5
C5 [2] F6	30	50	70	110
C6 [2]	4	4	6	6
C7 [2]	42.6	60	90	130
C8 [2]	36.4	44.8	55.8	68
C9 [2]	87.4	118.1	145.6	193.3
B	5	5	6	10
H	15	18	24.5	35

★ 10比時,L1=44.
★ C1~C9是公製標準馬達連接板尺寸,請依所選用的馬達決定.
★ 本公司有權針對以上數據規格逕行設計變更不先行告知.

★ L1=44 when gear ratio is 10.
★ C1~C9 are motor specific dimensions(metric std shown), Size may vary according to motor flange.
★ Specification subject to change without notice.

PAE Double Stage Dimensions PAE雙段外型尺寸圖

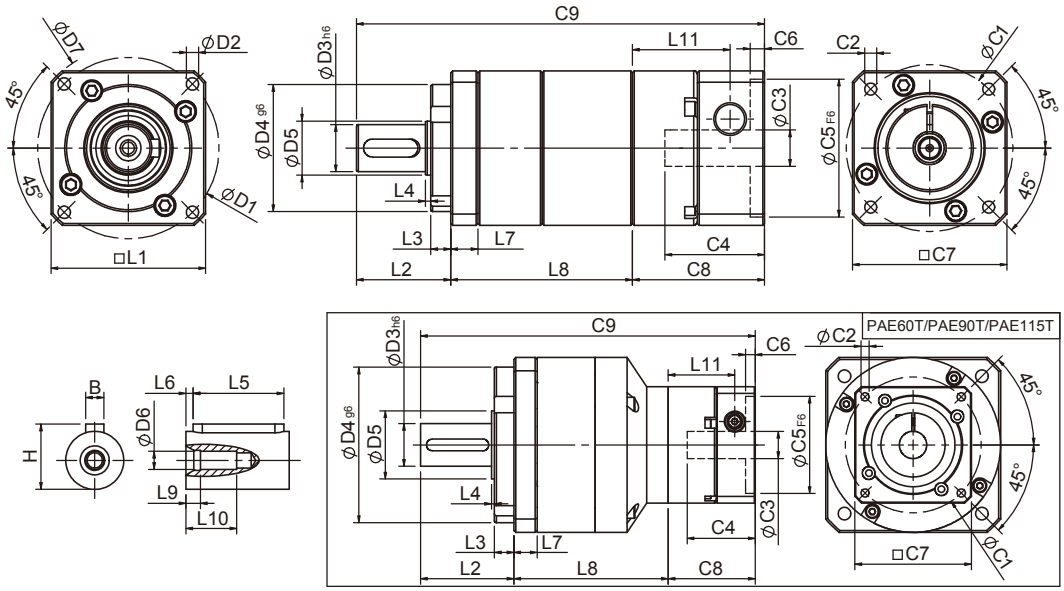

Specifications 規格

Unit:mm

尺寸 Dimensions	PAE42	PAE60	PAE60T	PAE90	PAE 90T	PAE115T
D1	50	70		100		130
D2	3.4	5.5		6.5		9
D3 h6	13	16		22		32
D4 g6	35	50		80		110
D5	15	20		35		45
D6	M4x0.7P	M5x0.8P		M8x1.25P		M12x1.75P
D7	56	80		118		148
L1	42.6(44)	60		90		115
L2	26	37		48		65
L3	5.5	7		10		12
L4	1.5	1.5		1.5		2
L5	15	25		32		40
L6	2	2		3		5
L7	7.3	10		12		16
L8	49.9	67	62.6	82.8	72.3	98.4
L9	4	4		4.5		6
L10	14	16.5		20.5		30
L11	26.9	34.3	26.9	41.5	34.3	41.5
C1 [2]	46	70	46	90	70	90
C2 [2]	M4x0.7P	M5x0.8P	M4x0.7P	M6x1.0P	M5x0.8P	M6x1.0P
C3 [2]	≦8/≦11	≦14/≦19	≦8/≦11	≦19/≦24/≦28	≦14/≦19	≦19/≦24/≦28
C4 [2]	26.5	33.5	26.5	41	33.5	41
C5 [2] F6	30	50	30	70	50	70
C6 [2]	4	4	4	6	4	6
C7 [2]	42.6	60	42.6	90	60	90
C8 [2]	36.4	44.8	36.4	55.8	44.8	55.8
C9 [2]	112.3	148.8	136	186.6	165.1	219.2
B	5	5		6		10
H	15	18		24.5		35

★ 100比時,L1=44.
★ C1~C9是公製標準馬達連接板尺寸,請依所選用的馬達決定.
★ 本公司有權針對以上數據規格逕行設計變更不先行告知.

★ L1=44 when gear ratio is 100.
★ C1~C9 are motor specific dimensions(metric std shown), Size may vary according to motor flange.
★ Specification subject to change without notice.

PAE Specifications Table PAE性能規格共表

規格 Specifications		節數 Stage	減速比 Ratio	PAE-42	PAE-60	PAE-90	PAE-115
額定輸出力矩 T_{2N} Nominal Output Torque	N · m	1	3	9	28	85	210
			4	10	32	80	240
			5	11	35	95	260
			7	10	28	85	220
			9	8	23	75	210
			10	8	21	65	190
		節數 Stage	減速比 Ratio	PAE-42	PAE-60/ PAE-60T	PAE-90/ PAE-90T	PAE-115T
		2	15	11	34	90	230
			20	10	32	80	240
			25	11	35	95	260
			30	-	-	-	260
			35	11	35	95	260
			40	-	-	-	260
			45	11	35	95	260
			49	10	-	-	-
			50	-	35	95	260
			63	10	-	-	-
			70	-	28	85	220
			100	8	21	65	190
急停力矩 T_{2NOT} Emergency Stop Torque	N · m	3.0 倍額定輸出力矩 (3.0 times of Nominal Output Torque) (* 最大輸出力矩 Max. Output Torque T_{2B} =60% of Emergency Stop Torque)					
額定輸入轉速 n_{1N} Nominal Input Speed	rpm	1,2	3-100	4000	4000	3000	2500
最大輸入轉速 n_{1max} Max. Input Speed	rpm	1,2	3-100	8000	6000	6000	5000
標準背隙 Standard Backlash P2	arcmin	1	3-10	≦ 9	≦ 8	≦ 7	≦ 6
		2	15-100	≦ 12	≦ 10	≦ 9	≦ 8
扭轉剛性 Torsional Rigidity	N · m /arcmin	1,2	3-100	1.5	4.0	8.5	17
容許徑向力 F_{2rB}[1] Max. Radial Load	N	1,2	3-100	760	1250	2030	4200
容許軸向力 F_{2aB}[1] Max. Axial Load	N	1,2	3-100	410	700	1200	2600
使用溫度 Operating Temp.	℃		3-100	-10℃ ~ +90℃			
使用壽命 Service Life	hr		3-100	20,000 (10,000/ 連續運轉 Continuous operation)			
效率 Efficiency	%	1	3-10	≧ 95%			
		2	15-100	≧ 90%			
重量 Weight	kg	1	3-10	0.6	1.3	3.2	7.5
		2	15-100	0.8	1.8/1.6	4.8/3.7	9.2
安裝方向 Mounting Position	-	1,2	3-100	任意方向 Any direction			
噪音值 Noise Level [2]	dBA/1m	1,2	3-100	61	63	66	67
防護等級 Protection Class	-	1,2	3-100	IP65			
潤滑 Lubrication	-	1,2	3-100	全合成潤滑油脂 Synthetic Lubricant			

減速機轉動慣量 Inertia(J1)

節數 Stage	減速比 Ratio	單位 unit	PAE-42(ψ8)	PAE-60(ψ14)	PAE-90(ψ19)	PAE-115(ψ24)
1	3	Kg · cm²	0.04	0.23	0.77	2.30
	4		0.03	0.21	0.67	1.92
	5		0.03	0.21	0.61	1.71
	7		0.03	0.21	0.60	1.65
	9/10		0.03	0.21	0.60	1.63
節數 Stage	減速比 Ratio		PAE-42(ψ8)	PAE-60(ψ14)/ PAE-60T(ψ8)	PAE-90(ψ19)/ PAE-90T(ψ14)	PAE-115T (ψ19)
2	15/20/25		0.03	0.21(0.03)	0.61(0.21)	0.61
	30/35/49		0.03	0.21(0.03)	0.60(0.21)	0.60
	40/45/50/63/70/100		0.03	0.21(0.03)	0.60(0.21)	0.60

* 1. 輸出轉速 100rpm 時，作用於輸出軸中心位置。Applied to the output shaft center @100rpm.
* 2. 3000rpm 空載量測。Measured at 3000 rpm with no load. These values are measured by gearbox with ratio = 10 (1-stage) or ratio = 100 (2-stage) at nominal input speed or 3000 rpm (if nominal input speed is higher than 3000 rpm) with no load.

※本公司有權對以上數據規格逕行設計變更不先行告知。The above figures/specifications are subject to change without prior notice.

Products due to human error, natural disasters or other factors lead to poor or damaged, will not be covered under warranty.
產品因人為原因或天災等因素導致不良或損壞，不在保固範圍內。


SESAME
PAE
SESAME MOTOR

PAC SERIES

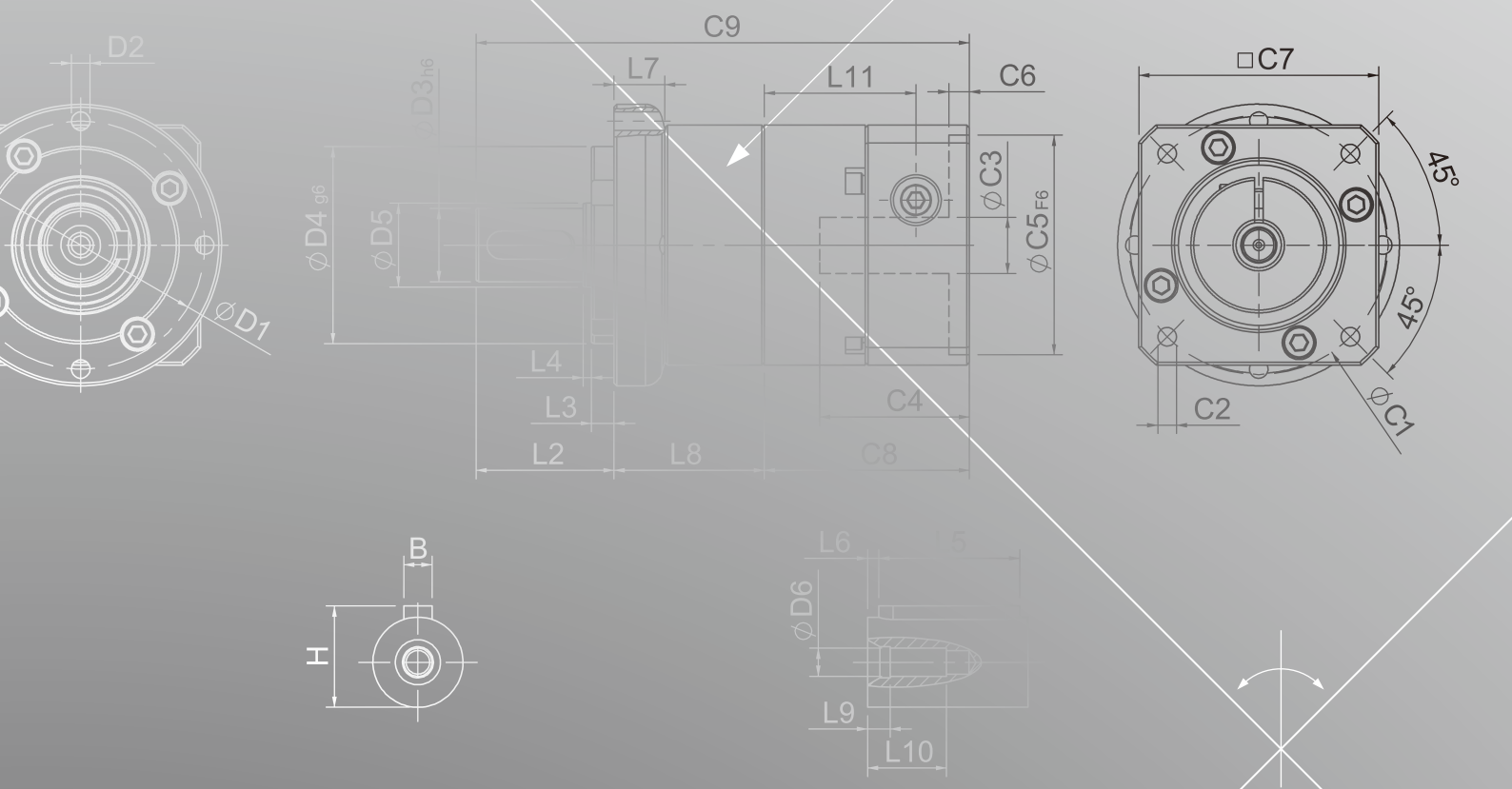
D2
ØD1
C9
L7
L11
C6
ØD3h6
ØD4g6
ØD5
ØC3
ØC5F6
L4
L3
L2
L8
C4
C8
□C7
45°
45°
C2
ØC1
B
H
L6
L5
ØD6
L9
L10

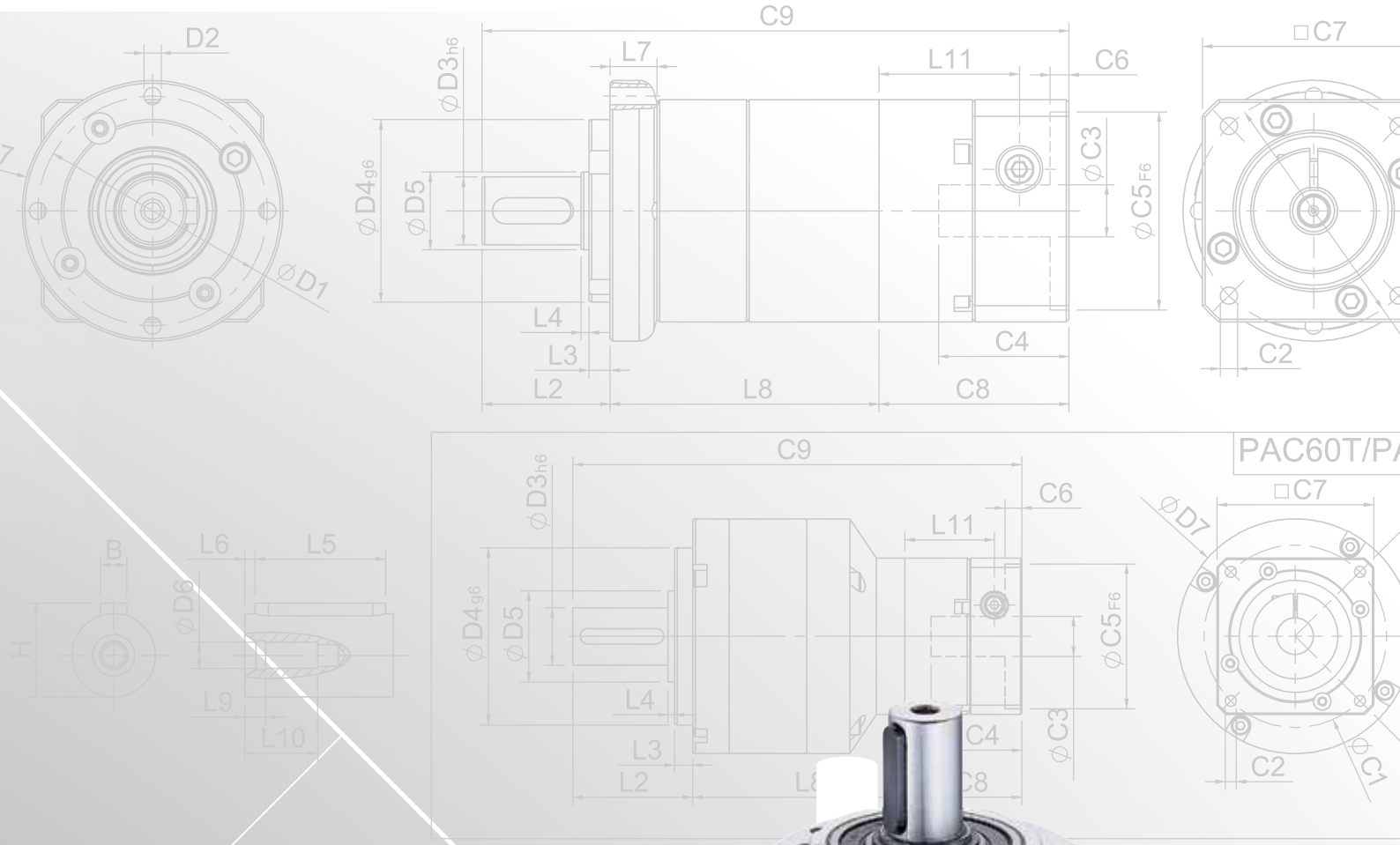
D2
C9
L7
L11
C6
□C7
ØD3h6
ØD4g6
ØD5
ØC3
ØC5F6
ØD1
L4
L3
L2
L8
C4
C8
C2
PAC60T/PA
ØD7
B
L6
L5
ØD6
H
L9
L10
ØC1


SESAME
PAC
SESAME MOTOR

PAC單段外型尺寸圖 PAC Single Stage Dimensions

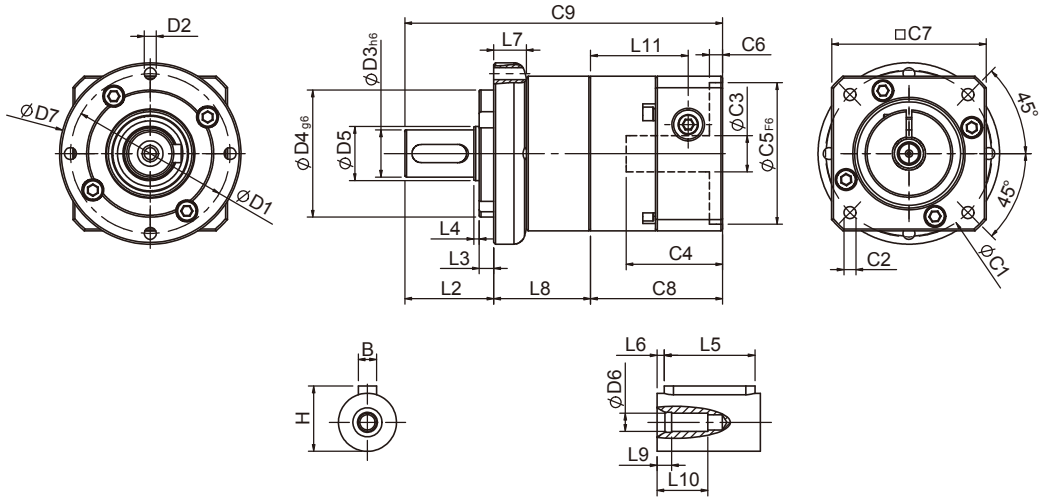

Specifications 規格

Unit:mm

尺寸 Dimensions	PAC50	PAC70	PAC90	PAC120
D1	44	62	80	108
D2	M4x0.7P	M5x0.8P	M6x1.0P	M8x1.25P
$D3_{h6}$	12	16	22	32
$D4_{g6}$	35	52	68	90
D5	15	20	35	45
D6	M4x0.7P	M5x0.8P	M8x1.25P	M12x1.75P
D7	50	70	90	120
L2	24.5	36	46	60
L3	4	6	7	7
L4	1.5	1.5	2.5	2
L5	15	25	32	40
L6	2	2	3	5
L7	8.8	13.3	14	15
L8	26.5	37.3	43.8	65.3
L9	4	4	4.5	6
L10	14	16.5	20.5	30
L11	26.9	34.3	41.5	51.5
$C1^{2}$	46	70	90	145
$C2^{2}$	M4x0.7P	M5x0.8P	M6x1.0P	M8x1.25P
$C3^{2}$	≦8/≦11	≦14/≦19	≦19/≦24/≦28	≦24/≦32/≦38
$C4^{2}$	26.5	33.5	41	51.5
$C5^{2}{}_{F6}$	30	50	70	40
$C6^{2}$	4	4	6	6
$C7^{2}$	42.6	60	90	130
$C8^{2}$	36.4	44.8	55.8	68
$C9^{2}$	87.4	118.1	145.6	193.3
B	4	5	6	10
H	13.5	18	24.5	35

★ C1~C9是公製標準馬達連接板尺寸,請依所選用的馬達決定.

★ 本公司有權針對以上數據規格逕行設計變更不先行告知.

★ C1~C9 are motor specific dimensions(metric std shown), Size may vary according to motor flange.

★ Specification subject to change without notice.

PAC雙段外型尺寸圖 PAC Double Stage Dimensions

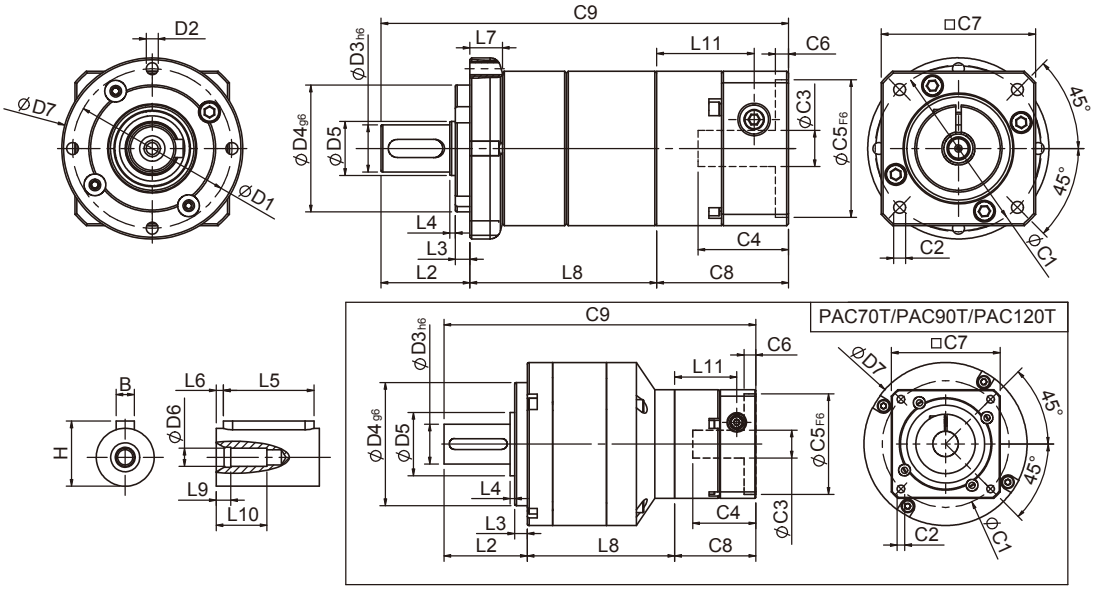

Specifications 規格

Unit:mm

尺寸 Dimensions	PAC50	PAC70	PAC70T	PAC90	PAC90T	PAC120T
D1	44	62		80		108
D2	M4x0.7P	M5x0.8P		M6x1.0P		M8x1.25P
D3 h6	12	16		22		32
D4 g6	35	52		68		90
D5	15	20		35		45
D6	M4x0.7P	M5x0.8P		M8x1.25P		M12x1.75P
D7	50	70		90		120
L2	24.5	36		46		60
L3	4	6		7		7
L4	1.5	1.5		2.5		2
L5	15	25		32		40
L6	2	2		3		5
L7	8.8	13.3		14		15
L8	51.4	68	63.6	84.8	74.3	103.4
L9	4	4		4.5		6
L10	14	16.5		20.5		30
L11	26.9	34.3	26.9	41.5	34.3	41.5
C1 [2]	46	70	46	90	70	90
C2 [2]	M4x0.7P	M5x0.8P	M4x0.7P	M6x1.0P	M5x0.8P	M8x1.25P
C3 [2]	≦8/≦11	≦14/≦19	≦8/≦11	≦19/≦24/≦28	≦14/≦19	≦19/≦24/≦28
C4 [2]	26.5	33.5	26.5	41	33.5	41
C5 [2] F6	30	50	30	70	50	70
C6 [2]	4	4	4	6	4	6
C7 [2]	42.6	60	42.6	90	60	90
C8 [2]	36.4	44.8	36.4	55.8	44.8	55.8
C9 [2]	112.3	148.8	136	186.6	165.1	219.2
B	4	5		6		10
H	13.5	18		24.5		35

★ C1~C9是公製標準馬達連接板尺寸,請依所選用的馬達決定.
★ 本公司有權針對以上數據規格逕行設計變更不先行告知.

★ C1~C9 are motor specific dimensions(metric std shown), Size may vary according to motor flange.
★ Specification subject to change without notice.

PAC Specifications Table PAC性能規格共表

規格 Specifications		節數 Stage	減速比 Ratio	PAC-50	PAC-70	PAC-90	PAC-120
額定輸出力矩 T_{2N} Nominal Output Torque	N · m	1	3	9	28	85	210
			4	10	32	80	240
			5	11	35	95	260
			7	10	28	85	220
			9	8	23	75	210
			10	8	21	65	190
		節數 Stage	減速比 Ratio	PAC-50	PAC-70/ PAC-70T	PAC-90/ PAC-90T	PAC-120T
		2	15	11	34	90	230
			20	10	32	80	240
			25	11	35	95	260
			30	-	-	-	260
			35	11	35	95	260
			40	-	-	-	260
			45	11	35	95	260
			49	10	-	-	-
			50	-	35	95	260
			63	10	-	-	-
			70	-	28	85	220
			100	8	21	65	190
急停力矩 T_{2NOT} Emergency Stop Torque	N · m	3.0 倍額定輸出力矩 (3.0 times of Nominal Output Torque) (* 最大輸出力矩 Max. Output Torque T_{2B} =60% of Emergency Stop Torque)					
額定輸入轉速 n_{1N} Nominal Input Speed	rpm	1,2	3-100	4000	4000	3000	2500
最大輸入轉速 n_{1max} Max. Input Speed	rpm	1,2	3-100	8000	6000	6000	5000
標準背隙 Standard Backlash P2	arcmin	1	3-10	≦ 9	≦ 8	≦ 7	≦ 6
		2	15-100	≦ 12	≦ 10	≦ 9	≦ 8
扭轉剛性 Torsional Rigidity	N · m /arcmin	1,2	3-100	1.5	4.0	8.5	17
容許徑向力 F_{2rB}[1] Max. Radial Load	N	1,2	3-100	760	1250	2030	4200
容許軸向力 F_{2aB}[1] Max. Axial Load	N	1,2	3-100	410	700	1200	2600
使用溫度 Operating Temp.	℃		3-100	-10℃ ~ +90℃			
使用壽命 Service Life	hr		3-100	20,000 (10,000/ 連續運轉 Continuous operation)			
效率 Efficiency	%	1	3-10	≧ 95%			
		2	15-100	≧ 90%			
重量 Weight	kg	1	3-10	0.6	1.3	3.2	7.5
		2	15-100	0.8	1.8/1.6	4.8/3.7	9.2
安裝方向 Mounting Position	-	1,2	3-100	任意方向 Any direction			
噪音值 Noise Level [2]	dBA/1m	1,2	3-100	61	63	66	67
防護等級 Protection Class	-	1,2	3-100	IP65			
潤滑 Lubrication	-	1,2	3-100	全合成潤滑油脂 Synthetic Lubricant			

減速機轉動慣量 Inertia(J1)

節數 Stage	減速比 Ratio	單位 unit	PAC-50(ψ8)	PAC-70(ψ14)	PAC-90(ψ19)	PAC-120(ψ24)
1	3	Kg · cm²	0.04	0.23	0.77	2.30
	4		0.03	0.21	0.67	1.92
	5		0.03	0.21	0.61	1.71
	7		0.03	0.21	0.60	1.65
	9/10		0.03	0.21	0.60	1.63
節數 Stage	減速比 Ratio		PAC-50(ψ8)	PAC-70(ψ14)/ PAC-70T(ψ8)	PAC-90(ψ19)/ PAC-90T(ψ14)	PAC-120T (ψ19)
2	15/20/25		0.03	0.21(0.03)	0.61(0.21)	0.61
	30/35/49		0.03	0.21(0.03)	0.60(0.21)	0.60
	40/45/50/63/70/100		0.03	0.21(0.03)	0.60(0.21)	0.60

* 1. 輸出轉速 100rpm 時，作用於輸出軸中心位置。Applied to the output shaft center @100rpm.
* 2. 3000rpm 空載量測。Measured at 3000 rpm with no load. These values are measured by gearbox with ratio = 10 (1-stage) or ratio = 100 (2-stage) at nominal input speed or 3000 rpm (if nominal input speed is higher than 3000 rpm) with no load.

※本公司有權對以上數據規格逕行設計變更不先行告知。The above figures/specifications are subject to change without prior notice.

Products due to human error, natural disasters or other factors lead to poor or damaged, will not be covered under warranty.
產品因人為原因或天災等因素導致不良或損壞，不在保固範圍內。


SESAME
PAC
SESAME MOTOR

PAN SERIES

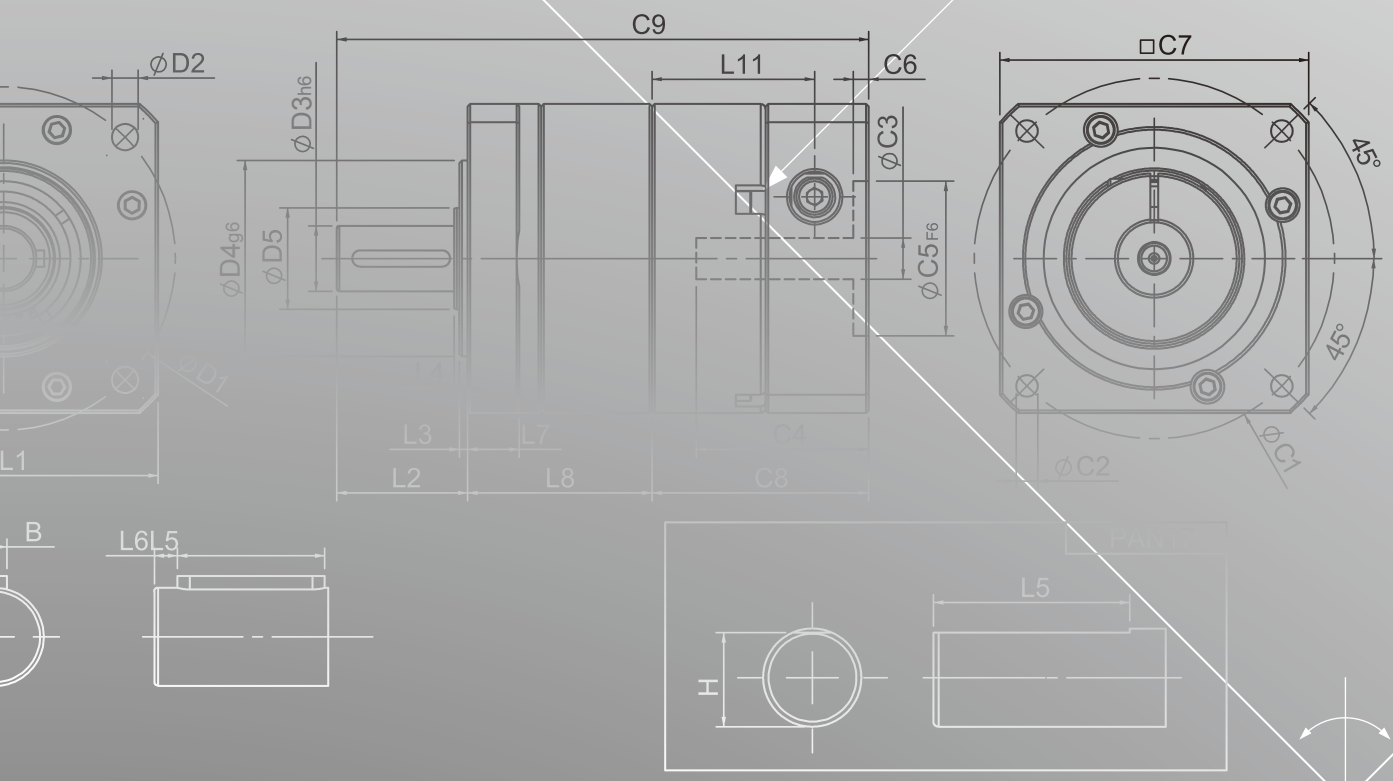
C9
L11
C6
□C7
ϕD2
ϕD3h6
ϕC3
ϕD4g6
ϕD5
ϕC5F6
45°
45°
ϕD1
L1
L4
L3
L7
C4
L2
L8
C8
ϕC2
ϕC1
B
L6
L5
L5
H

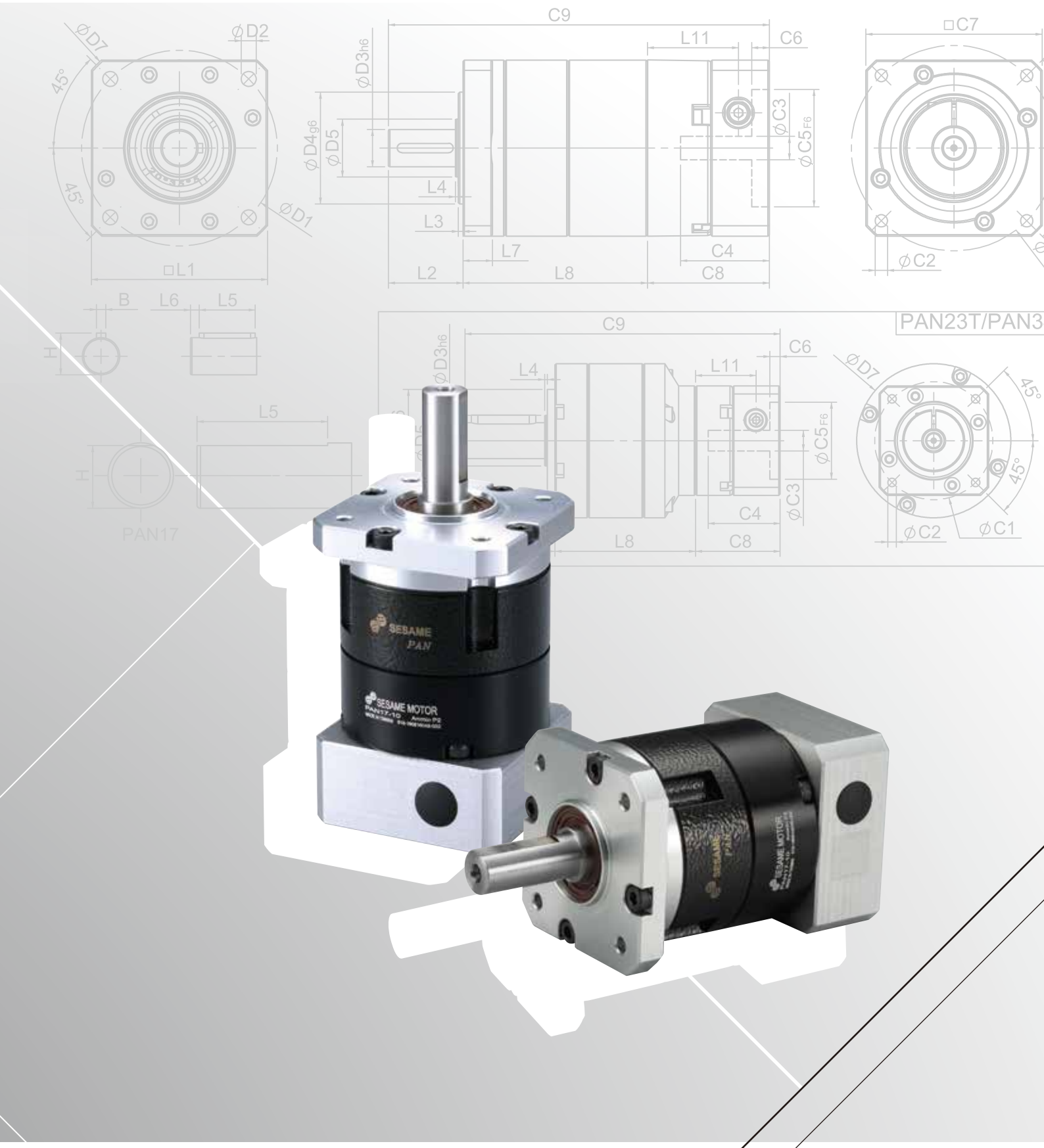
C9
L11
C6
□C7
ØD7
ØD2
ØD3h6
45°
ØD4g6
ØD5
ØC3
ØC5F6
L4
L3
ØD1
L7
C4
□L1
L2
L8
C8
ØC2
B
L6
L5
H
PAN23T/PAN3
PAN17
ØC1
SESAME
PAN
SESAME MOTOR

PAN Single Stage Dimensions PAN單段外型尺寸圖

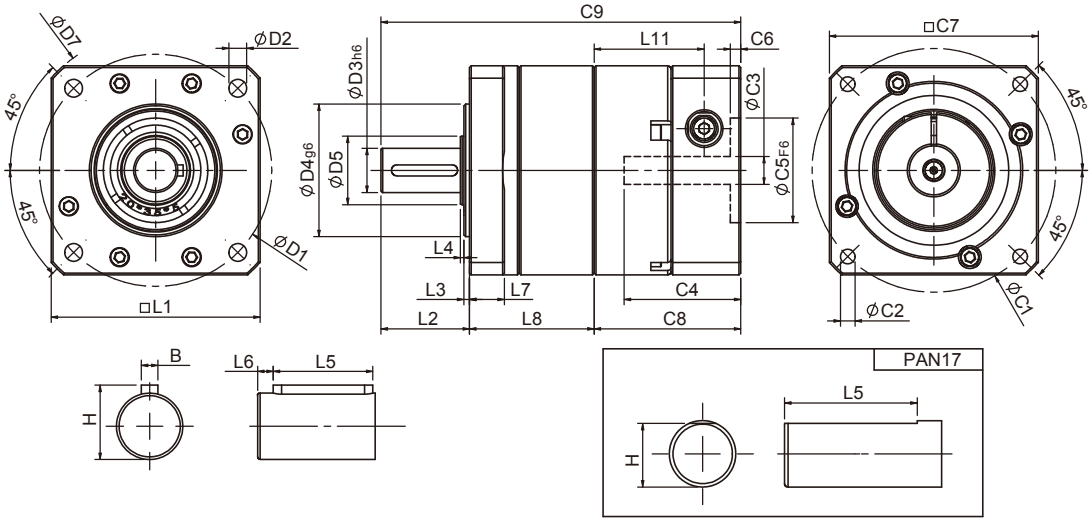

Specifications 規格

Unit:mm

尺寸 Dimensions	PAN17	PAN23	PAN34	PAN42	PAN56
D1	43.8	66.67	98.425	125.73	177.8
D2	3.25	5.1	5.6	7.1	10.2
$D3_{h6}$	9.525	12.7	19.05	25	25
$D4_{g6}$	21.97	38.1	73.025	55.55	114.3
D5	12	20	35	32	-
D7	56	80	118	148	195
L1	42.6(44)	60	90	115	145
L2	25.4	25.4	31.75	42	41
L3	1.6	1.6	1.7	2.4	4
L4	1	1	1	2	-
L5	19.05	19.05	25.4	32	32
L6	-	3	3	4	4
L7	6.5	10	12	19	20
L8	28.8	35.8	43.5	67.4	68.4
L11	26.9	31.6	37.3	51.8	51.8
C1 [2]	46	70	90	145	145
C2 [2]	M4x0.7P	M5x0.8P	M6x1.0P	M8x1.25P	M8x1.25P
C3 [2]	≦8/≦11	≦14/≦19	≦19/≦24/≦28	≦24/≦32/≦38	≦24/≦32/≦38
C4 [2]	26.5	33.5	41	51.5	51.5
$C5^{2}_{F6}$	30	50	70	110	110
C6 [2]	4	4	6	6	6
C7 [2]	42.6	60	90	130	130
C8 [2]	36.4	42.1	51.5	68	68
C9 [2]	90.6	103.3	126.75	177.4	177.4
B	-	3.175	4.763	8	8
H	9.14	14.1	21.1	28	28

★ 10比時,L1=44.
★ C1~C9是公製標準馬達連接板尺寸,請依所選用的馬達決定.
★ 本公司有權針對以上數據規格逕行設計變更不先行告知.

★ L1=44 when gear ratio is 10.
★ C1~C9 are motor specific dimensions(metric std shown), Size may vary according to motor flange.
★ Specification subject to change without notice.

PAN Double Stage Dimensions PAN雙段外型尺寸圖

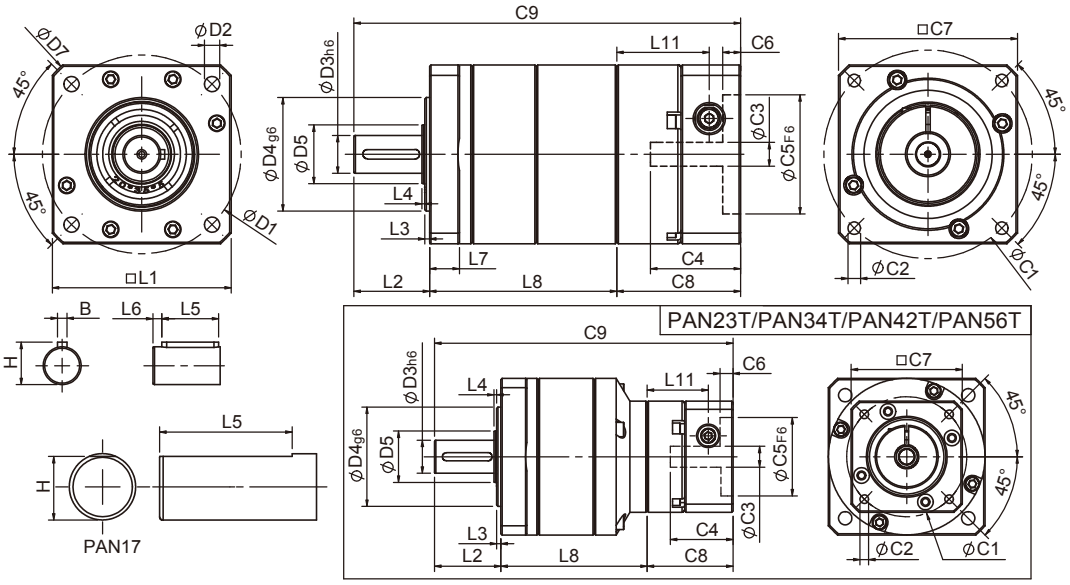

Specifications 規格

Unit:mm

尺寸 Dimensions	PAN17	PAN23	PAN23T	PAN34	PAN34T	PAN42T	PAN56T
D1	43.8	66.67		98.425		125.73	177.8
D2	3.25	5.1		5.6		7.1	10.2
$D3_{h6}$	9.525	12.7		19.05		25	25
$D4_{g6}$	21.97	38.1		73.025		55.55	114.3
D5	12	20		35		32	-
D7	56	80		118		148	195
L1	42.6(44)	60		90		115	145
L2	25.4	25.4		31.75		42	41
L3	1.6	1.6		1.7		2.4	4
L4	1	1		1		2	-
L5	19.05	19.05		25.4		32	32
L6	-	3		3		4	4
L7	6.5	10		12		19	20
L8	51.25	62.8	56.1	77.3	72.8	105.5	106.5
L11	23.4	31	23.4	37.3	31	37.3	37.3
$C1^{2}$	46	70	46	90	70	90	90
$C2^{2}$	M4x0.7P	M5x0.8P	M4x0.7P	M6x1.0P	M5x0.8P	M6x1.0P	M6x1.0P
$C3^{2}$	≦8/≦11	≦14/≦19	≦8/≦11	≦19/≦24/≦28	≦14/≦19	≦19/≦24/≦28	≦19/≦24/≦28
$C4^{2}$	26.5	33.5	26.5	41	33.5	41	41
$C5^{2}{}_{F6}$	30	50	30	70	50	70	70
$C6^{2}$	4	4	4	6	4	6	6
$C7^{2}$	42.6	60	42.6	90	60	90	90
$C8^{2}$	32.9	41.5	32.9	51.5	41.5	51.5	51.5
$C9^{2}$	109.55	129.7	114.4	160.55	146.05	199	199
B	-	3.175		4.763		8	8
H	9.14	14.1		21.1		28	28

★ 100比時,L1=44.
★ C1~C9是公製標準馬達連接板尺寸,請依所選用的馬達決定.
★ 本公司有權針對以上數據規格逕行設計變更不先行告知.

★ L1=44 when gear ratio is 100.
★ C1~C9 are motor specific dimensions(metric std shown), Size may vary according to motor flange.
★ Specification subject to change without notice.

PAN Triple Stage Dimensions PAN三段外型尺寸圖

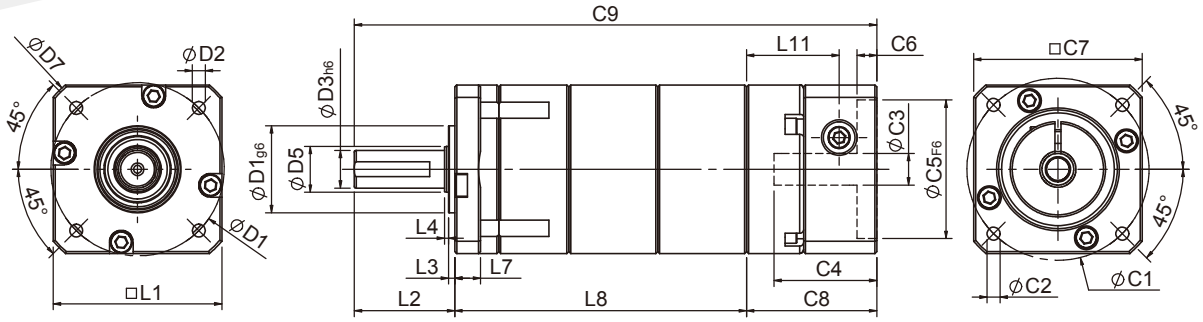

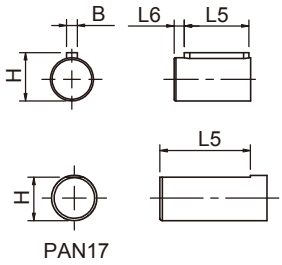

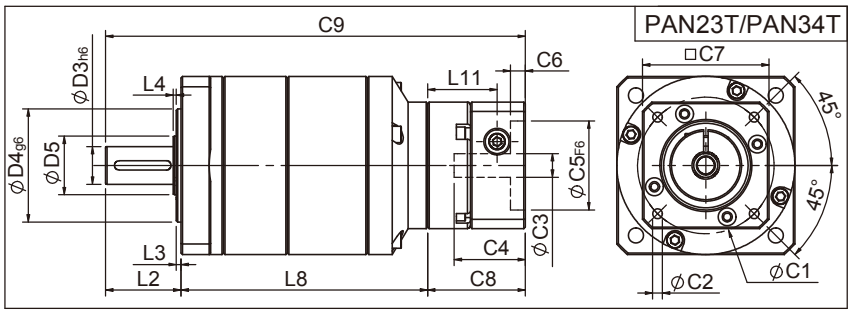

Specifications 規格

Unit:mm

尺寸 Dimensions	PAN17	PAN23T	PAN34T
D1	43.8	66.67	98.425
D2	3.25	5.1	5.6
$D3_{h6}$	9.525	12.7	19.05
$D4_{g6}$	21.97	38.1	73.025
D5	12	20	35
D7	56	80	118
L1	42.6(44)	60	90
L2	25.4	25.4	31.75
L3	1.6	1.6	1.7
L4	1	1	1
L5	19.05	19.05	25.4
L6	-	3	3
L7	6.5	10	12
L8	73.7	83.1	106.6
L11	23.4	23.4	31
$C1^{2}$	46	46	70
$C2^{2}$	M4x0.7P	M4x0.7P	M5x0.8P
$C3^{2}$	≦8/≦11	≦8/≦11	≦14/≦19
$C4^{2}$	26.5	26.5	33.5
$C5^{2}{}_{F6}$	30	30	50
$C6^{2}$	4	4	4
$C7^{2}$	42.6	42.6	60
$C8^{2}$	32.9	32.9	41.5
$C9^{2}$	132	141.4	179.85
B	-	3.175	4.763
H	9.14	14.1	21.1

★ 1000比時,L1=44.
★ C1~C9是公製標準馬達連接板尺寸,請依所選用的馬達決定.
★ 本公司有權針對以上數據規格逕行設計變更不先行告知.

★ L1=44 when gear ratio is 1000.
★ C1~C9 are motor specific dimensions(metric std shown), Size may vary according to the motor flange chosen.
★ Specification subject to change without notice.

PAN Specifications Table PAN性能規格共表

規格 Specifications		節數 Stage	減速比 Ratio	PAN-17	PAN-23	PAN-34	PAN-42	PAN-56
額定輸出力矩 T_{2N} Nominal Output Torque	N • m	1	3	9	28	85	200	200
			4	10	32	80	215	215
			5	11	35	95	215	215
			7	10	28	85	200	200
			9	8	23	75	195	195
			10	8	21	65	180	180
		節數 Stage	減速比 Ratio	PAN-17	PAN-23 / PAN-23T	PAN-34 / PAN-34T	PAN-42T	PAN-56T
		2	15	11	35/24	95/68	168	168
			20	11	35/31	95/95	215	215
			25	11	35/30	95/95	215	215
			35	11	35/28	95/95	215	215
			45	11	35/27	95/92	215	215
			50	(Ratio 49) : 10	35/27	95/82	205	205
			70	(Ratio 63) : 10	28/28	85/85	200	200
			90	(Ratio 81) : 8	23/23	75/75	195	195
			100	8	21/21	65/65	180	180
		節數 Stage	減速比 Ratio	PAN-17	PAN-23T	PAN-34T	PAN-42T	PAN-56T
		3	125	11	35	95	215	215
			175	11	35	95	215	215
			225	11	35	95	215	215
			245	11	35	95	215	215
			315	11	35	95	215	215
			405	11	35	95	215	215
			567	10	28	85	200	200
			729	8	23	75	195	195
			1000	8	21	65	180	180
急停力矩 T_{2NOT} Emergency Stop Torque	N • m	2.5 倍額定輸出力矩 (2.5 times of Nominal Output Torque) * 最大輸出力矩 Max. Output Torque T_{2B}=60% of Emergency Stop Torque)						
額定輸入轉速 n_{1N} Nominal Input Speed	rpm	1,2,3	3-1000	4000	4000	3000	2500	2500
最大輸入轉速 n_{1max} Max. Input Speed	rpm	1,2,3	3-1000	6000	6000	6000	5000	5000
標準背隙 Standard Backlash P2	arcmin	1	3-10	≦ 9	≦ 8	≦ 7	≦ 6	≦ 6
		2	15-100	≦12	≦10	≦ 9	≦ 8	≦ 8
		3	125~1000	≦15	≦12	≦12	≦12	≦12
扭轉剛性 Torsional Rigidity	N • m /arcmin	1,2,3	3-1000	1.2	3.5	8.5	17	17
容許徑向力 F_{2rB}[1] Max. Radial Load	N	1,2,3	3-1000	580	960	2160	4760	4760
容許軸向力 F_{2aB}[1] Max. Axial Load	N	1,2,3	3-1000	410	430	1100	2630	2630
使用溫度 Operating Temp.	℃	1,2,3	3-1000	-10℃ ~ +90℃				
使用壽命 Service Life	hr	1,2,3	3-1000	20,000(10,000 連續運轉 Continuous operation)				
效率 Efficiency	%	1	3-10	≧ 95%				
		2	15-100	≧ 90%				
		3	125~1000	≧ 85%				
重量 Weight	kg	1	3-10	0.5	1.1	2.8	6.3	6.6
		2	15-100	0.7	1.5/1.3	4.2/3.1	7.9	8.2
		3	125~1000	0.8	1.7	4.5	9.3	9.6
安裝方向 Mounting Position	-	1,2,3	3-1000	任意方向 Any direction				
噪音值 Noise Level [2]	dBA/1m	1,2,3	3-1000	60	63	66	67	67
防護等級 Protection Class	-	1,2,3	3-1000	IP 65				
潤滑Lubrication	-	1,2,3	3-1000	全合成潤滑油脂 Synthetic Lubricant				

減速機轉動慣量 Inertia (J1)

節數 Stage	減速比 Ratio	單位 unit	PAN-17(ψ8)	PAN-23(ψ14)	PAN-34(ψ19)	PAN-42(ψ24)	PAN-56(ψ24)
1	3	Kg • cm²	0.04	0.23	0.77	2.30	2.30
	4		0.03	0.21	0.67	1.92	1.92
	5~10		0.03	0.21	0.61	1.71	1.71
節數 Stage	減速比 Ratio		PAN-17(ψ8)	PAN-23(ψ14) / PAN-23T(ψ8)	PAN-34 (ψ 19) / PAN-34T(ψ14)	PAN-42T(ψ19)	PAN-56T(ψ19)
2	15		0.04	0.23(0.04)	0.77(0.23)	0.77	0.77
	其它比數 Other ratios		0.03	0.21(0.03)	0.61(0.21)	0.61	0.61
節數 Stage	減速比 Ratio		PAN-17(ψ8)	PAN-23T(ψ8)	PAN-34T(ψ 14)	PAN-42T(ψ19)	PAN-56T(ψ19)
3	所有比數 All ratios		0.03	0.03	0.21	0.61	0.61

* 1. 輸出轉速 100rpm 時，作用於輸出軸中心位置。Applied to the output shaft center @100rpm.
* 2. 3000rpm 空載量測。Measured at 3000 rpm with no load. These values are measured by gearbox with ratio = 10 (1-stage) or ratio = 100 (2-stage) at nominal input speed or 3000 rpm (if nominal input speed is higher than 3000 rpm) with no load.

※本公司有權對以上數據規格逕行設計變更不先行告知。The above figures/specifications are subject to change without prior notice.

PGS SERIES

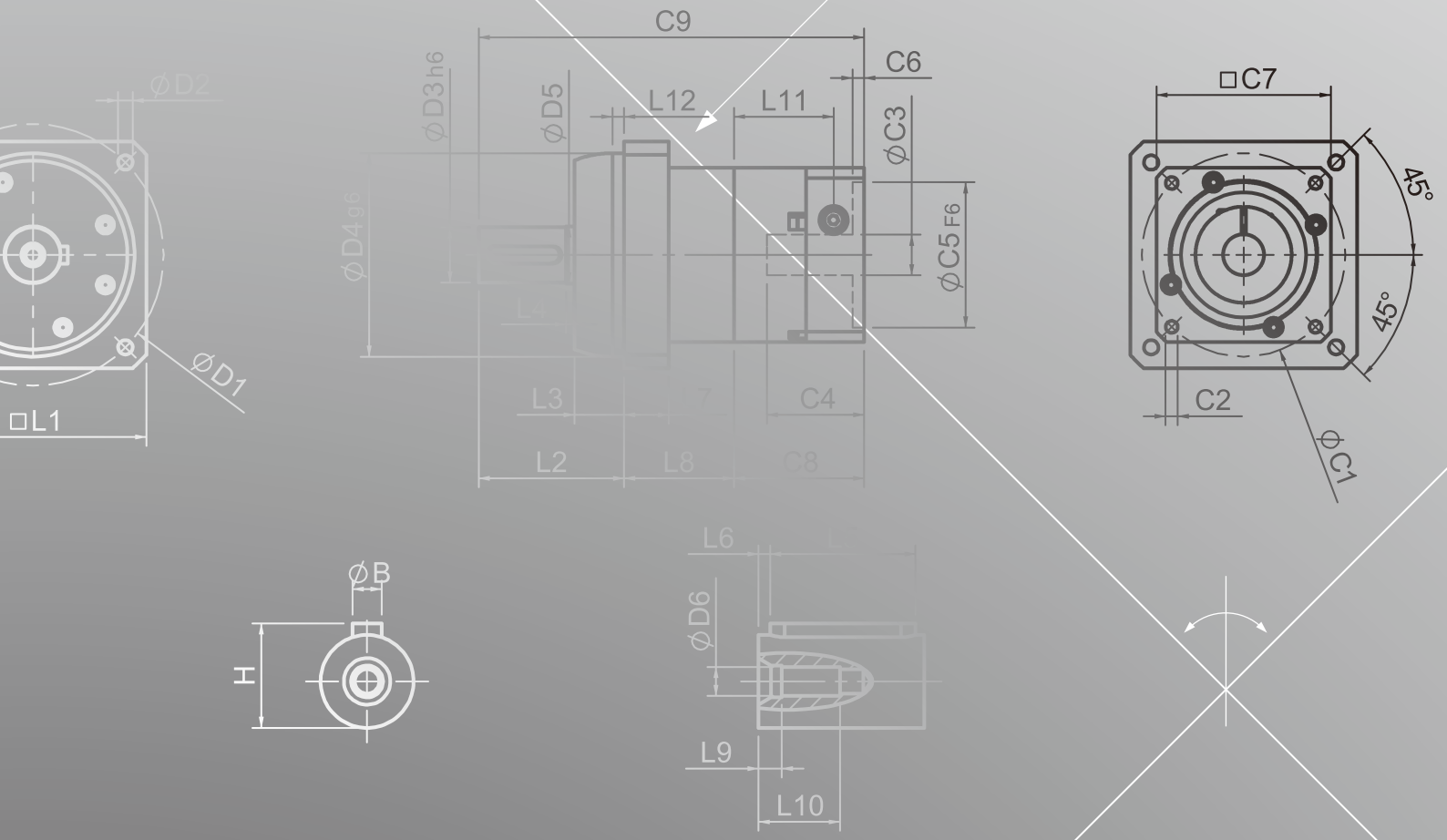
C9
C6
□C7
ØD2
ØD3h6
ØD5
L12
L11
ØC3
ØD4g6
ØC5F6
45°
45°
L4
ØD1
□L1
L3
L7
C4
C2
L2
L8
C8
ØC1
ØB
H
L6
ØD6
L9
L10

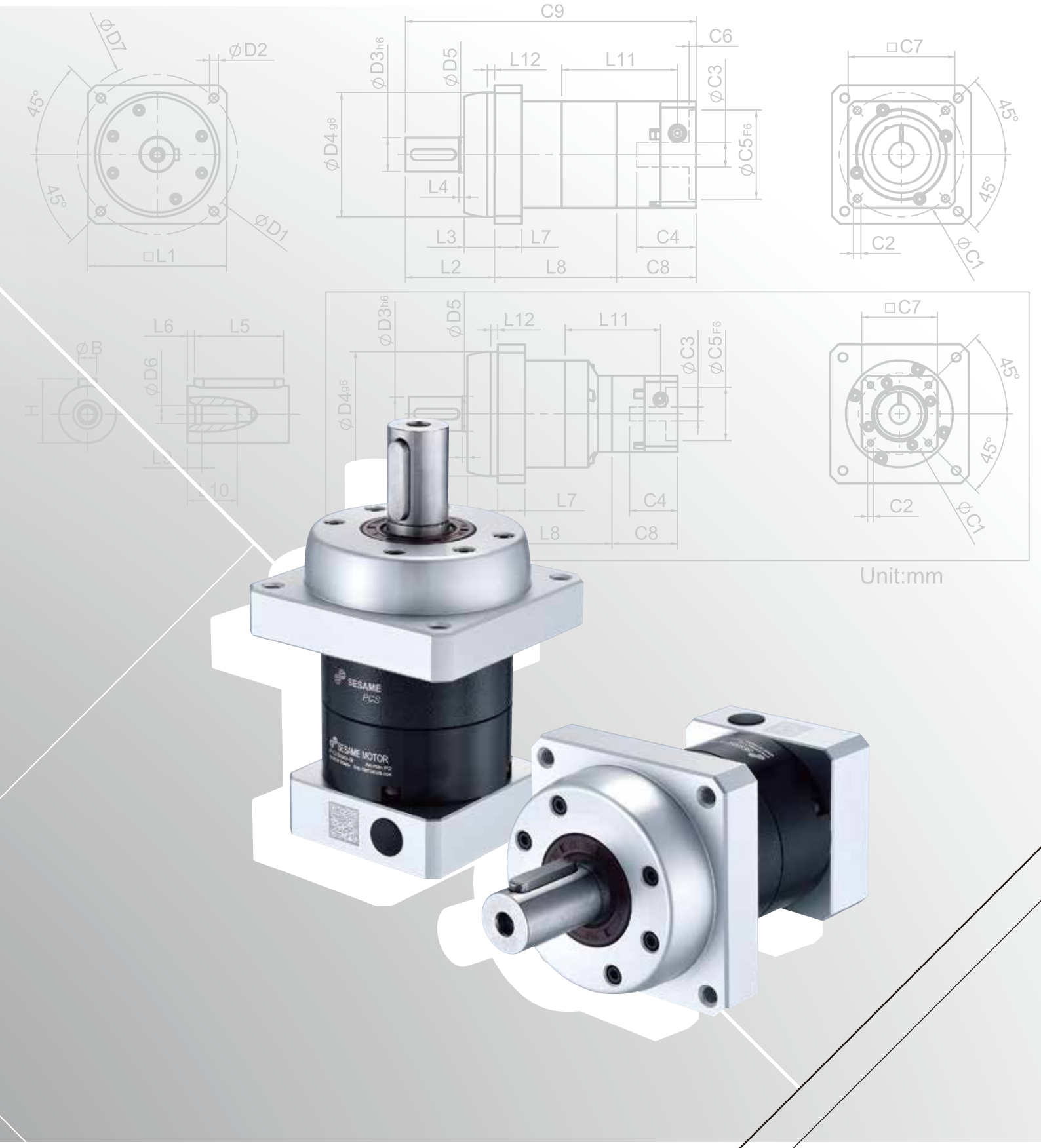
C9
C6
ØD7
ØD2
ØD3h6
ØD5
L12
L11
ØC3
□C7
45°
ØD4g6
ØC5F6
L4
ØD1
L3
L7
C4
C2
ØC1
□L1
L2
L8
C8
L6
L5
ØB
ØD6
H
L1
10
Unit:mm
SESAME
SESAME MOTOR

PGS Single Stage Dimensions PGS單段外型尺寸圖

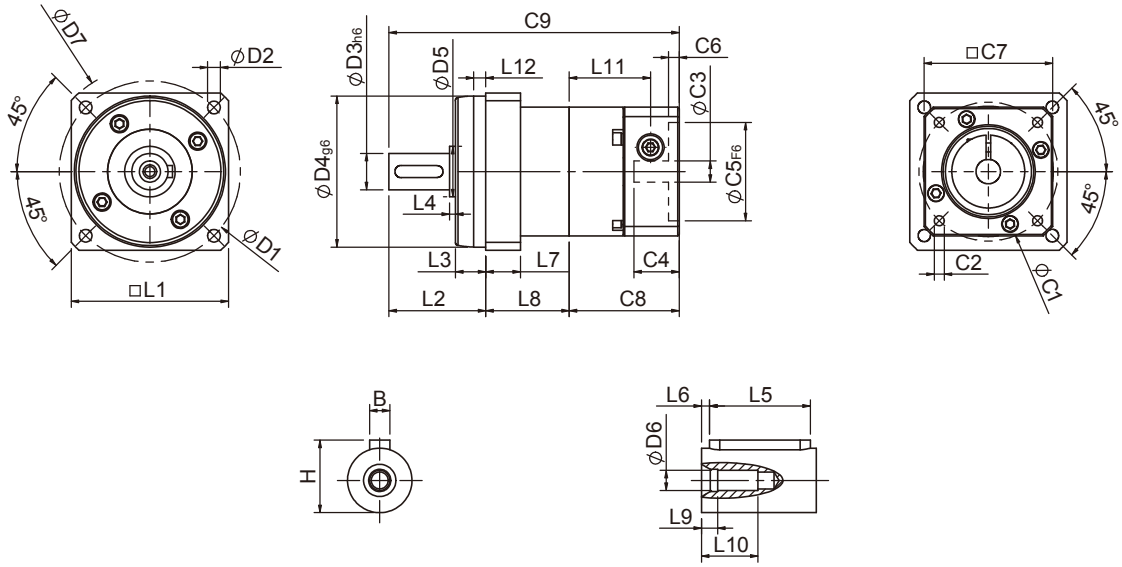

Specifications 規格

Unit:mm

尺寸 Dimensions	PGS42	PGS60	PGS90	PGS115
D1	60	90	115	135
D2	M5x0.8P	M6x1.0P	M8x1.25P	M10x1.5P
D3 h6	12	19	24	32
D4 g6	50	70	90	110
D5	17	20	30	45
D6	M4x0.7P	M6x1.0P	M8x1.25P	M12x1.75P
D7	70	104	132	165
L1	52	78	98	125
L2	32	50	61	75
L3	10	17	18	14.5
L4	2	3	1.5	5.5
L5	16	25	32	40
L6	2	3	3	5
L7	11.5	15.4	18	18
L8	27.6	37.8	46.2	62.3
L9	4	4	4.5	6
L10	14	16.5	20.5	30
L11	26.9	34.3	41.55	51.5
L12	3	4	5	5
C1 [2]	46	70	90	145
C2 [2]	M4x0.7P	M5x0.8P	M6x1.0P	M8x1.25P
C3 [2]	≦8/≦11	≦14/≦19	≦19/≦24/≦28	≦24/≦32/≦38
C4 [2]	26.5	33.5	41	51.5
C5 [2] F6	30	50	70	110
C6 [2]	4	4	6	6
C7 [2]	42.6	60	90	130
C8 [2]	36.4	44.8	55.8	68
C9 [2]	96	132.6	163	205.3
B	4	6	8	10
H	13.5	21.5	27	35

★ C1~C9是公製標準馬達連接板尺寸,請依所選用的馬達決定.

★ 本公司有權針對以上數據規格逕行設計變更不先行告知.

★ C1~C9 are motor specific dimensions(metric std shown), Size may vary according to motor flange.

★ Specification subject to change without notice.

PGS Double Stage Dimensions PGS雙段外型尺寸圖

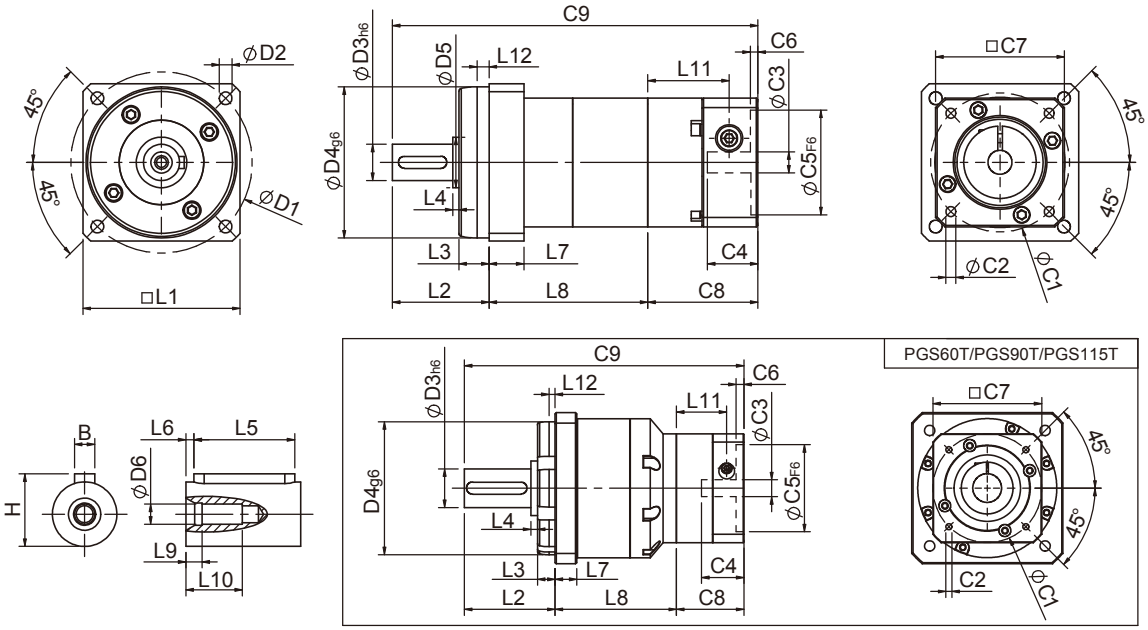

Specifications 規格

Unit:mm

尺寸 Dimensions	PGS42	PGS60	PGS60T	PGS90	PGS90T	PGS115T
D1	60	90		115		135
D2	M5x0.8P	M6x1.0P		M8x1.25P		M10x1.5P
D3 h6	12	19		24		32
D4 g6	50	70		90		110
D5	17	20		30		45
D6	M4x0.7P	M6x1.0P		M8x1.25P		M12x1.75P
D7	70	104		132		165
L1	52	78		98		125
L2	32	50		61		75
L3	10	17		18		14.5
L4	2	3		1.5		5.5
L5	16	25		32		40
L6	2	3		3		5
L7	11.5	15.4		18		18
L8	52.5	68.5	64.1	87.2	76.7	100.4
L9	4	4		4.5		6
L10	14	16.5		20.5		30
L11	51.8	34.3	26.9	41.55	34.3	41.55
L12	3	4		5		5
C1[2]	46	70	46	90	70	90
C2[2]	M4x0.7P	M5x0.8P	M4x0.7P	M6x1.0P	M5x0.8P	M6x1.0P
C3[2]	≦8/≦11	≦14/≦19	≦8/≦11	≦19/≦24/≦28	≦14/≦19	≦19/≦24/≦28
C4[2]	26.5	33.5	26.5	41	33.5	41
C5[2] F6	30	50	30	70	50	70
C6[2]	4	4	4	6	4	6
C7[2]	42.6	60	42.6	90	60	90
C8[2]	36.4	44.8	36.4	55.8	44.8	55.8
C9[2]	120.9	163.3	-	204	182.5	231.2
B	4	6		8		10
H	13.5	21. 5		27		35

★ C1~C9是公製標準馬達連接板尺寸,請依所選用的馬達決定.
★ 本公司有權針對以上數據規格逕行設計變更不先行告知.

★ C1~C9 are motor specific dimensions(metric std shown), Size may vary according to motor flange.
★ Specification subject to change without notice.

PGS Specifications Table PGS性能規格共表

規格 Specifications		節數 Stage	減速比 Ratio	PGS-42	PGS-60	PGS-90	PGS-115
額定輸出力矩 T_{2N} Nominal Output Torque	N • m	1	3	9	28	85	210
			4	10	32	80	240
			5	11	35	95	260
			7	10	28	85	220
			9	8	23	75	210
			10	8	21	65	190
		節數 Stage	減速比 Ratio	PGS-42	PGS-60/ PGS-60T	PGS-90/ PGS-90T	PGS-115T
		2	15	11	34	90	230
			20	10	32	80	240
			25	11	35	95	260
			35	11	35	95	260
			45	11	35	95	260
			49	10	28	85	260
			63	10	28	85	220
			81	8	23	75	210
			100	8	21	65	190
急停力矩 T_{2NOT} Emergency Stop Torque	N • m		3.0 倍額定輸出力矩 (3.0 times of Nominal Output Torque) (* 最大輸出力矩 Max. Output Torque T_{2B}=60% of Emergency Stop Torque)				
額定輸入轉速 n_{1N} Nominal Input Speed	rpm	1,2	3-100	4000	4000	3000	2500
最大輸入轉速 n_{1max} Max. Input Speed	rpm	1,2	3-100	8000	6000	6000	5000
標準背隙 Standard Backlash P2	arcmin	1 2	3-10 15-100	≦ 9 ≦ 12	≦ 8 ≦ 10	≦ 7 ≦ 9	≦ 6 ≦ 8
扭轉剛性Torsional Rigidity	N • m /arcmin	1,2	3-100	1.5	4.0	8.5	17
容許徑向力 F_{2rB} [1] Max. Radial Load	N	1,2	3-100	1120	1720	2800	4600
容許軸向力 F_{2aB} [1] Max. Axial Load	N	1,2	3-100	520	830	1730	2950
使用溫度 Operating Temp.	°C		3-100	-10 °C ~+90 °C			
使用壽命Service Life	hr		3-100	20,000 (10,000/ 連續運轉 Continuous operation)			
效率 Efficiency	%	1 2	3-10 15-100	≧95% ≧90%			
重量 Weight	kg	1 2	3-10 15-100	0.6 0.9	1.5 2.0/1.8	3.4 5.1/4.0	7.8 9.5
安裝方向 Mounting Position	-	1,2	3-100	任意方向Any direction			
噪音值 Noise Level [2]	dBA/1m	1,2	3-100	61	63	66	67
防護等級 Protection Class	-	1,2	3-100	IP65			
潤滑 Lubrication	-	1,2	3-100	全合成潤滑油脂 Synthetic Lubricant			

減速機轉動慣量 Inertia(J1)

節數Stage	減速比Ratio	單位unit	PGS-42(ψ8)	PGS-60(ψ14)	PGS-90(ψ19)	PGS-115(ψ24)
1	3	Kg • cm^2	0.04	0.23	0.77	2.30
	4		0.03	0.21	0.67	1.92
	5		0.03	0.21	0.61	1.71
	7		0.03	0.21	0.60	1.65
	9/10		0.03	0.21	0.60	1.63
節數Stage	減速比Ratio		PGS-42(ψ8)	PGS-60(ψ14)/ PGS-60T(ψ8)	PGS-90(ψ19)/ PGS-90T(ψ14)	PGS-115T(ψ19)
2	15/20/25		0.03	0.21(0.03)	0.61(0.21)	0.61
	35/49		0.03	0.21(0.03)	0.60(0.21)	0.60
	45/63/81/100		0.03	0.21(0.03)	0.60(0.21)	0.60

* 1. 輸出轉速 100rpm 時，作用於輸出軸中心位置。Applied to the output shaft center @100rpm.
* 2. 3000rpm 空載量測。Measured at 3000 rpm with no load. These values are measured by gearbox with ratio = 10 (1-stage) or ratio = 100 (2-stage) at nominal input speed or 3000 rpm (if nominal input speed is higher than 3000 rpm) with no load.

※本公司有權對以上數據規格逕行設計變更不先行告知。The above figures/specifications are subject to change without prior notice.

Products due to human error, natural disasters or other factors lead to poor or damaged, will not be covered under warranty.
產品因人為原因或天災等因素導致不良或損壞，不在保固範圍內。


SESAME
PGS
SESAME MOTOR

PNS SERIES

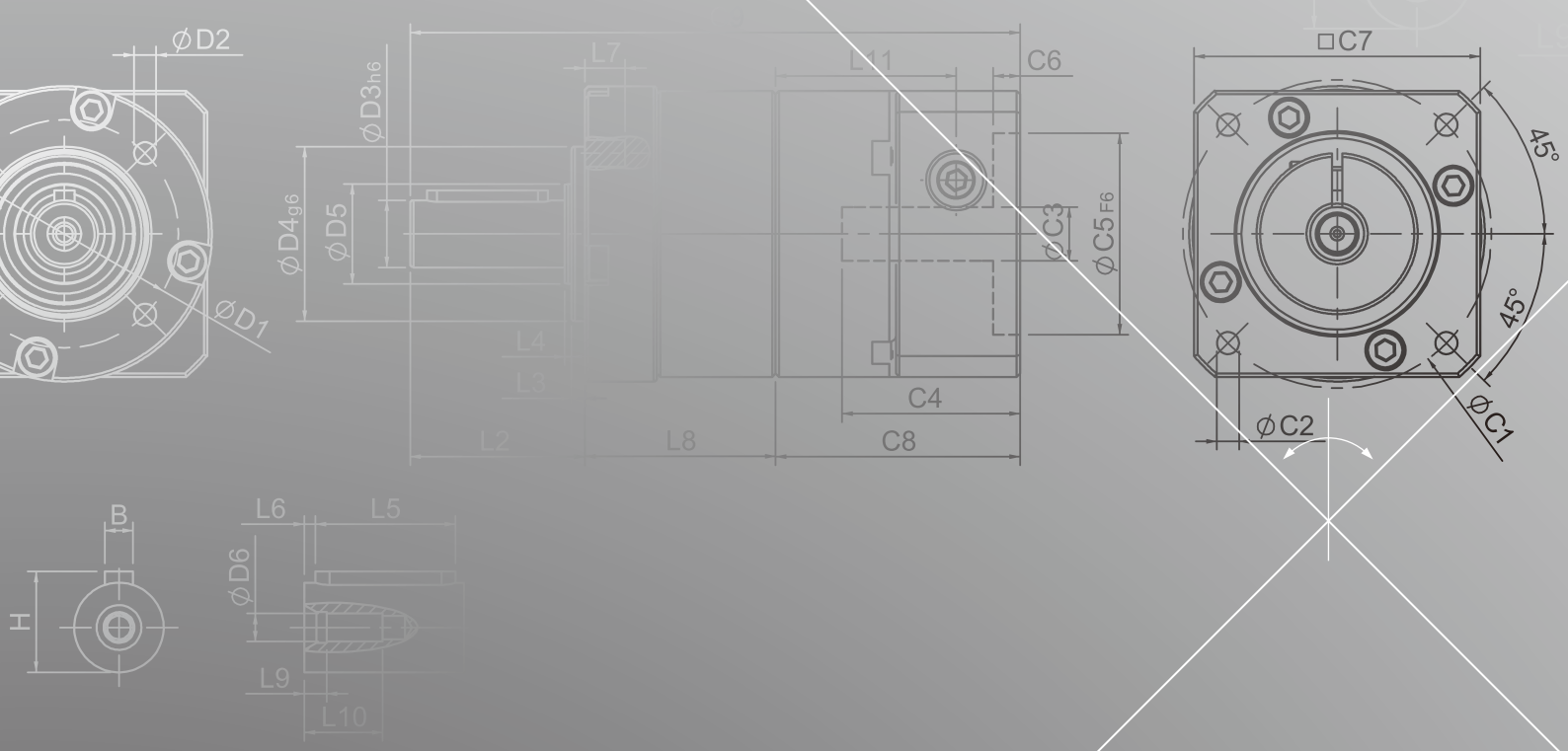
ØD2
ØD1
ØD3h6
ØD4g6
ØD5
L7
L11
C6
ØC3
ØC5F6
L4
L3
L2
L8
C4
C8
□C7
45°
45°
ØC2
ØC1
B
H
L6
L5
ØD6
L9
L10

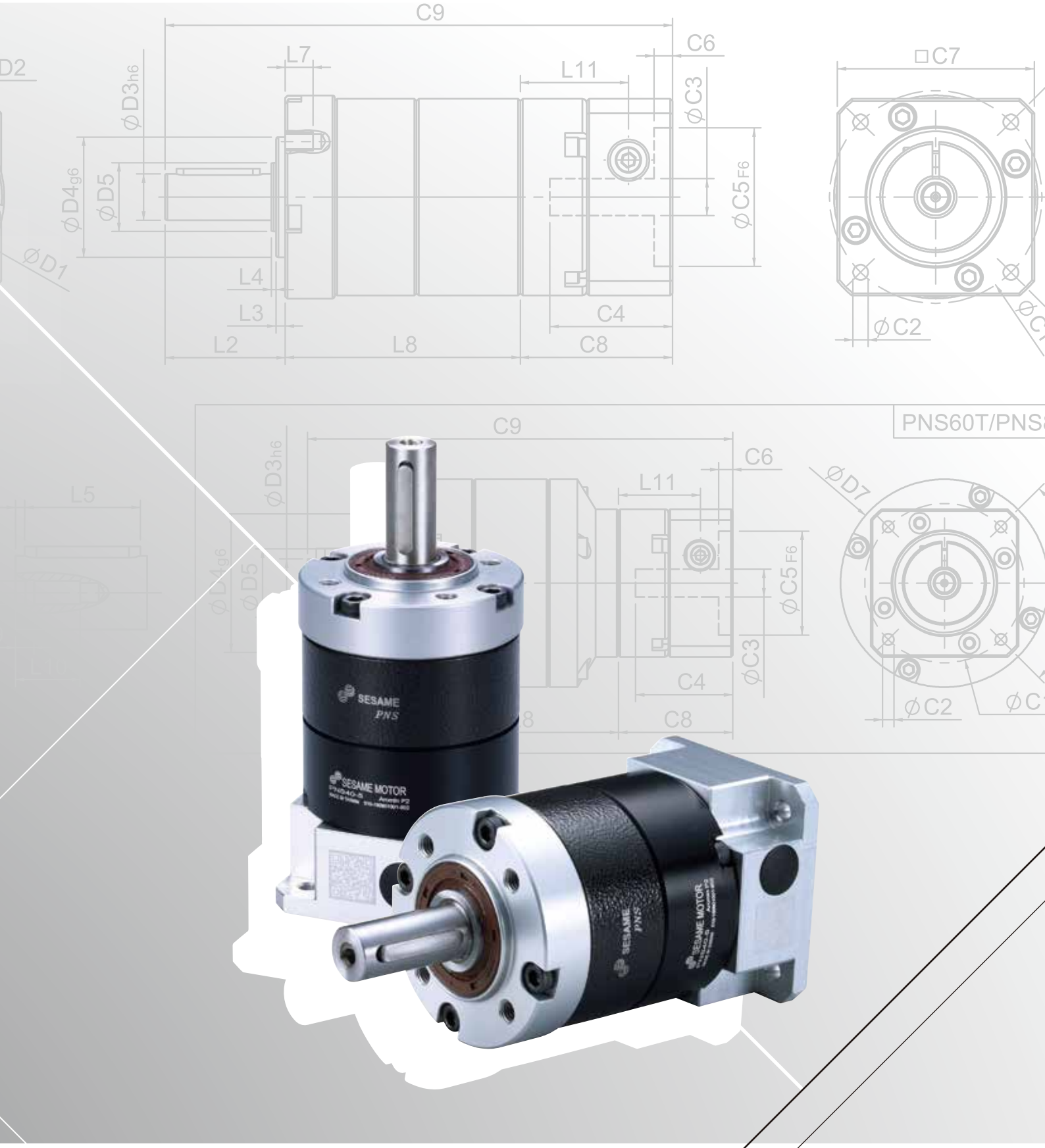
C9
C6
L7
L11
□C7
ϕD3h6
ϕC3
ϕD4g6
ϕD5
ϕC5F6
ϕD1
L4
L3
C4
ϕC2
L2
L8
C8
PNS60T/PNS
ϕD7
L5
SESAME
PNS
SESAME MOTOR

PNS Single Stage Dimensions PNS單段外型尺寸圖

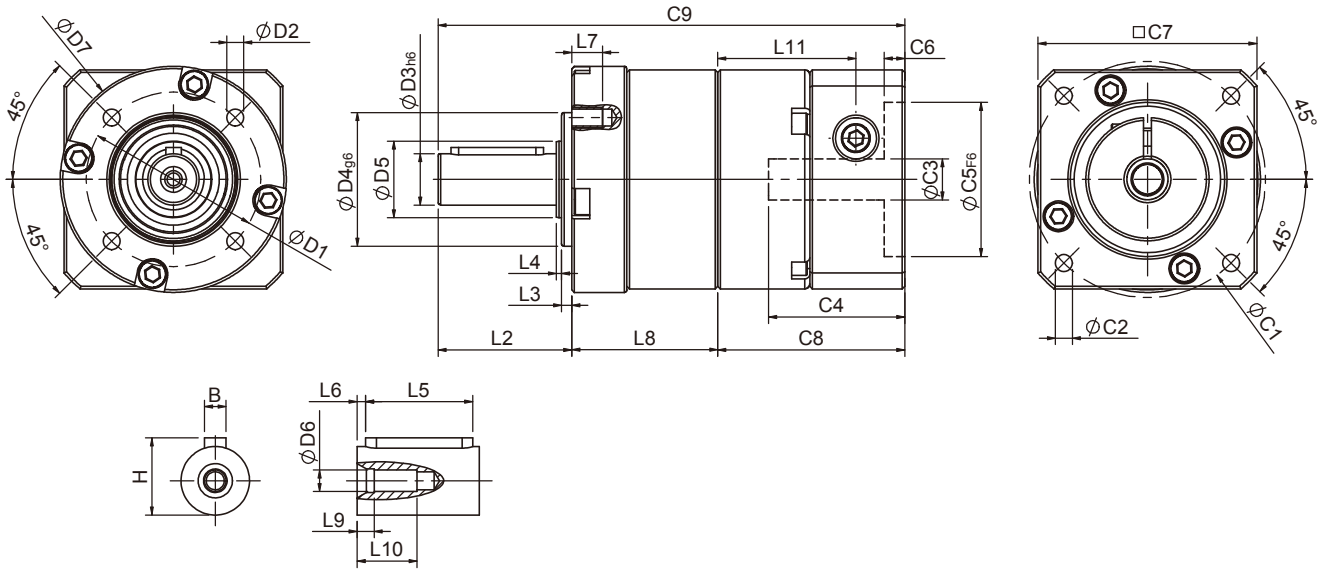

Specifications 規格

Unit:mm

尺寸 Dimensions	PNS40	PNS60	PNS80	PNS120	PNS160
D1	34	52	70	100	145
D2	M4x0.7P	M5x0.8P	M6x1.0P	M10x1.5P	M12x1.75P
$D3_{h6}$	10	14	20	25	40
$D4_{g6}$	26	40	60	80	130
D5	15	20	35	40	50
D6	M3x0.5P	M5x0.8P	M6x1.0P	M10x1.5P	M16x2.0P
D7	44	60	90	116	160
L2	26	35	40	55	87
L3	2	3	3	4	5
L4	1	1	1	1	2
L5	18	25	28	40	65
L6	2.5	2.5	4	5	8
L7	6	8	10	15	20
L8	28.4	34.4	42.2	68.8	81
L9	3	4	4.5	6	6
L10	9	16.5	16.5	26	38
L11	26.9	31.6	37.3	51.8	63
$C1^{2}$	46	70	90	145	130
$C2^{2}$	M4x0.7P	M5x0.8P	M6x1.0P	M8x1.25P	M8x1.25P
$C3^{2}$	≦8/≦11	≦14/≦19	≦19/≦24/≦28	≦24/≦32/≦38	≦35/≦38
$C4^{2}$	26.5	33.5	41	51.5	66.5
$C5^{2}_{F6}$	30	50	70	110	110
$C6^{2}$	4	4	6	6	5.5
$C7^{2}$	42.6	60	90	130	140
$C8^{2}$	36.4	42.1	51.5	68	80
$C9^{2}$	90.8	111.5	133.7	191.8	248
B	3	5	6	8	12
H	11.2	16	22.5	28	43

★ C1~C9是公製標準馬達連接板尺寸,請依所選用的馬達決定.

★ 本公司有權針對以上數據規格逕行設計變更不先行告知.

★ C1~C9 are motor specific dimensions(metric std shown), Size may vary according to motor flange.

★ Specification subject to change without notice.

PNS Double Stage Dimensions PNS雙段外型尺寸圖

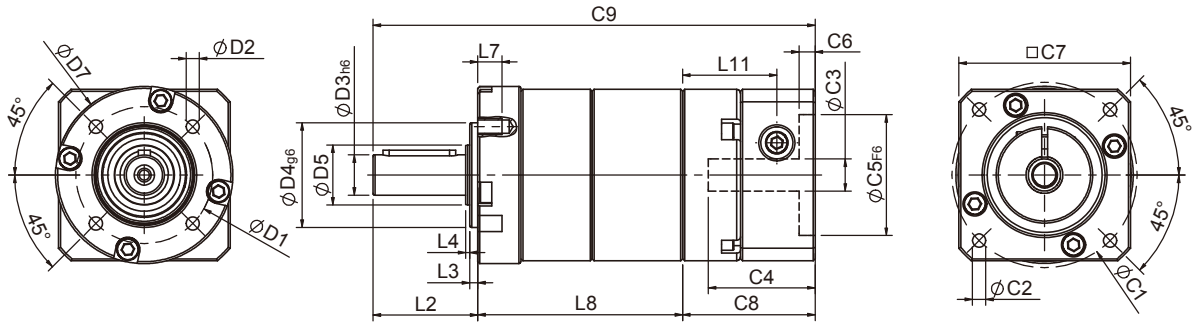

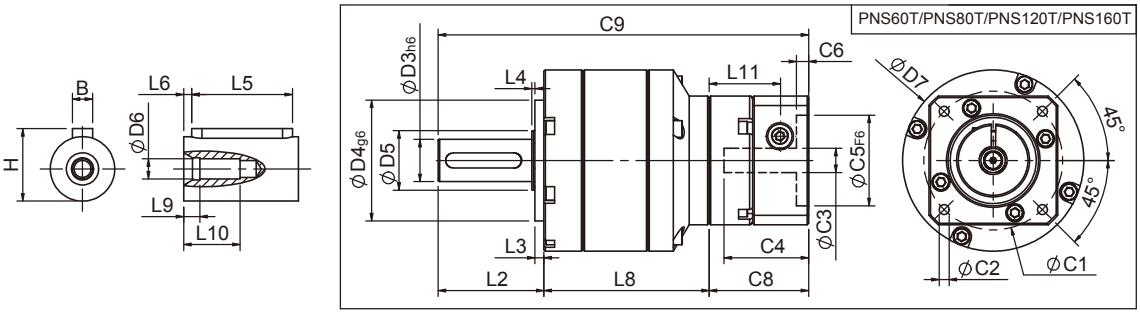

Specifications 規格

Unit:mm

尺寸 Dimensions	PNS40	PNS60	PNS60T	PNS80	PNS80T	PNS120T	PNS160	PNS160T
D1	34	52		70		100	145	
D2	M4x0.7P	M5x0.8P		M6x1.0P		M10x1.5P	M12x1.75P	
D3 h6	10	14		20		25	40	
D4 g6	26	40		60		80	130	
D5	15	20		35		40	50	
D6	M3x0.5P	M5x0.8P		M6x1.0P		M10x1.5P	M16x2.0P	
D7	44	60		90		116	160	
L2	26	35		40		55	87	
L3	2	3		3		4	5	
L4	1	1		1		1	2	
L5	18	25		28		40	65	
L6	2.5	2.5		4		5	8	
L7	6	8		10		15	20	
L8	50.85	61.4	54.7	76	71.5	106.9	142	129
L9	3	4		4.5		6	6	
L10	9	16.5		16.5		26	38	
L11	23.4	31	23.4	37.3	31	37.3	63	42
C1 [2]	46	70	46	90	70	90	130	115
C2 [2]	M4x0.7P	M5x0.8P	M4x0.7P	M6x1.0P	M5x0.8P	M6x1.0P	M8x1.25P	M8x1.25P
C3 [2]	≦8/≦11	≦14/≦19	≦8/≦11	≦19/≦24/≦28	≦14/≦19	≦19/≦24/≦28	≦35/≦38	≦24/≦28
C4 [2]	26.5	33.5	26.5	41	33.5	41	66.5	53.5
C5 [2] F6	30	50	30	70	50	70	110	95
C6 [2]	4	4	4	6	4	6	5.5	5.5
C7 [2]	42.6	60	42.6	90	60	90	140	120
C8 [2]	32.9	41.5	32.9	51.5	41.5	51.5	80	58
C9 [2]	109.75	137.9	122.6	167.5	153	213.4	309	274
B	3	5		6		8	12	
H	11.2	16		22.5		28	43	

★ C1~C9是公製標準馬達連接板尺寸,請依所選用的馬達決定.

★ 本公司有權針對以上數據規格逕行設計變更不先行告知.

★ C1~C9 are motor specific dimensions(metric std shown), Size may vary according to motor flange.

★ Specification subject to change without notice.

PNS Triple Stage Dimensions PNS三段外型尺寸圖-1

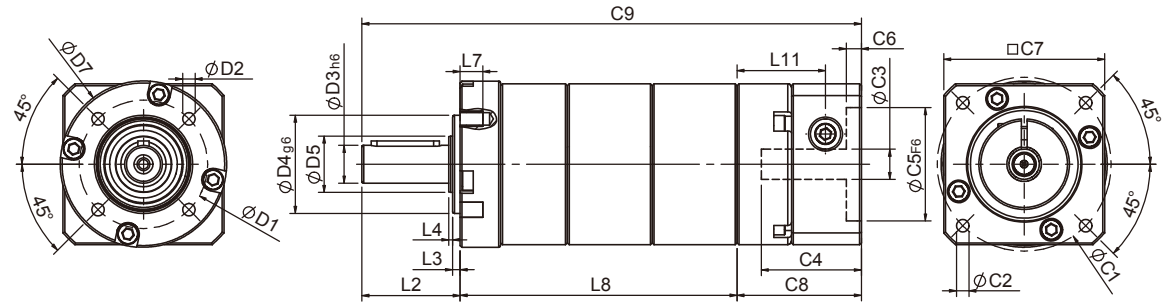

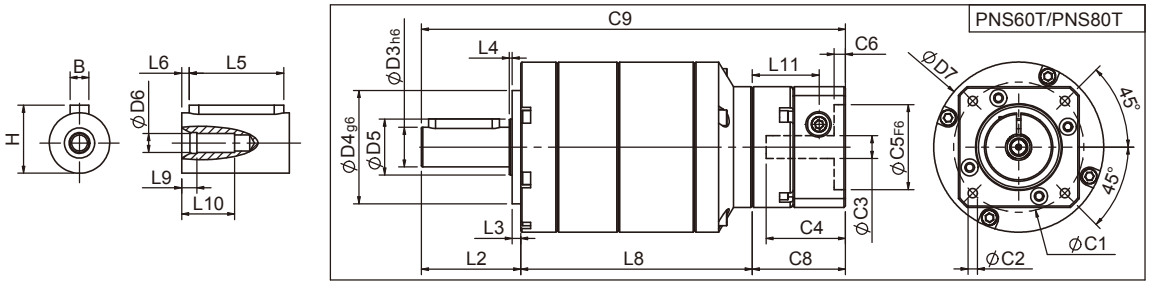

Specifications 規格

Unit:mm

尺寸 Dimensions	PNS40	PNS60T	PNS80T
D1	34	52	70
D2	M4x0.7P	M5x0.8P	M6x1.0P
$D3_{h6}$	10	14	20
$D4_{g6}$	26	40	60
D5	15	20	35
D6	M3x0.5P	M5x0.8P	M6x1.0P
D7	44	60	90
L2	26	35	40
L3	2	3	3
L4	1	1	1
L5	18	25	28
L6	2.5	2.5	4
L7	6	8	10
L8	73.3	81.7	105.3
L9	3	4	4.5
L10	9	16.5	16.5
L11	23.4	23.4	31
$C1^2$	46	46	70
$C2^2$	M4x0.7P	M4x0.7P	M5x0.8P
$C3^2$	≦8/≦11	≦8/≦11	≦14/≦19
$C4^2$	26.5	26 5	33.5
$C5^2{}_{F6}$	30	30	50
$C6^2$	4	4	4
$C7^2$	42.6	42.6	60
$C8^2$	32.9	32.9	41.5
$C9^2$	132.2	149.6	186.8
B	3	5	6
H	11.2	16	22.5

★ C1~C9是公製標準馬達連接板尺寸,請依所選用的馬達決定.

★ 本公司有權針對以上數據規格逕行設計變更不先行告知.

★ C1~C9 are motor specific dimensions(metric std shown), Size may vary according to the motor flange chosen.

★ Specification subject to change without notice.

PNS Triple Stage Dimensions-2 PNS三段外型尺寸圖-2

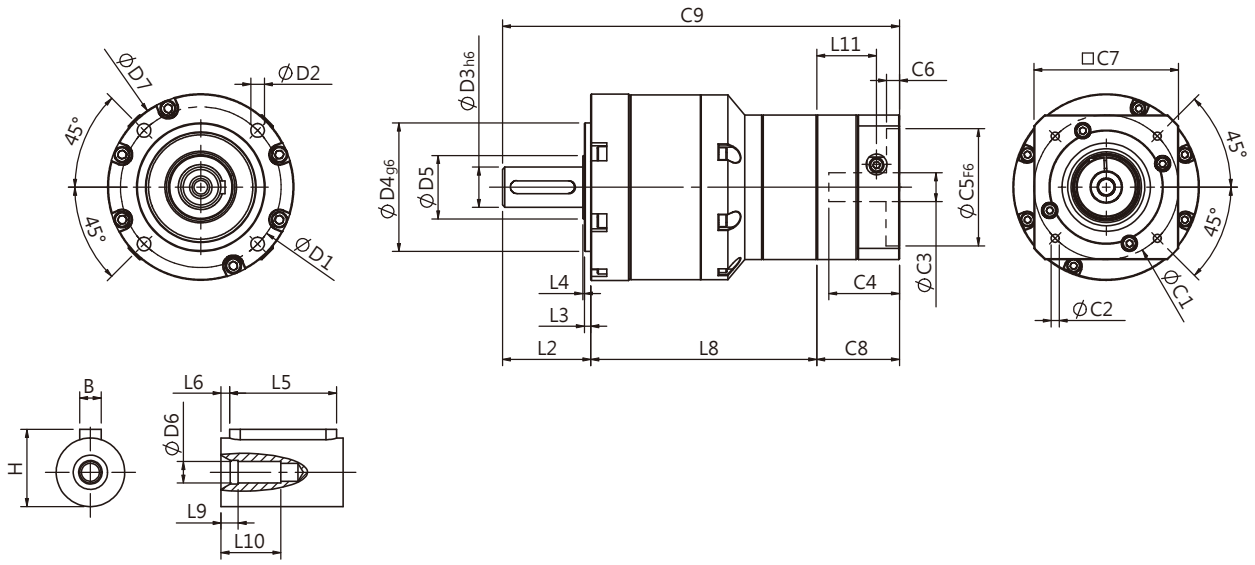

Specifications 規格

Unit:mm

尺寸 Dimensions	PNS120T	PNS160T
D1	100	145
D2	M10x1.5P	M12x1.75P
$D3_{h6}$	25	40
$D4_{g6}$	80	130
D5	40	50
D6	M10x1.5P	M16x2.0P
D7	116	160
L2	55	87
L3	4	5
L4	1	2
L5	40	65
L6	5	8
L7	15	20
L8	140.7	177
L9	6	6
L10	26	38
L11	37.3	42
$C1^2$	90	115
$C2^2$	M6x1.0P	M8x1.25P
$C3^2$	≦19/≦24/≦28	24/≦28
$C4^2$	41	53.5
$C5^2{}_{F6}$	70	95
$C6^2$	6	5.5
$C7^2$	90	120
$C8^2$	51.5	58
$C9^2$	247.2	322
B	8	12
H	28	43

★ C1~C9是公製標準馬達連接板尺寸,請依所選用的馬達決定.

★ 本公司有權針對以上數據規格逕行設計變更不先行告知.

★ C1~C9 are motor specific dimensions(metric std shown), Size may vary according to the motor flange chosen.

★ Specification subject to change without notice.

PNS Specifications Table PNS性能規格共表

規格 Specifications		節數 Stage	減速比 Ratio	PNS-40	PNS-60	PNS-80	PNS-120	PNS-160
額定輸出力矩 T_{2N} Nominal Output Torque	N · m	1	3	9	28	85	200	420
			4	10	32	80	215	490
			5	11	35	95	215	473
			7	10	28	85	200	400
			9	8	23	75	195	320
			10	8	21	65	180	320
		節數 Stage	減速比 Ratio	PNS-40	PNS-60/ PNS-60T	PNS-80/ PNS-80T	PNS-120T	PNS-160/ PNS-160T
		2	15	11	35/24	95/68	168	420
			20	11	35/31	95/95	215	490
			25	11	35/30	95/95	215	473
			35	11	35/28	95/95	215	473
			45	11	35/27	95/92	215	473
			50	(Ratio 49) : 10	35/27	95/82	205	473
			70	(Ratio 63) : 10	28/28	85/85	200	400
			90	(Ratio 81) : 8	23/23	75/75	195	320
			100	8	21/21	65/65	180	320
		節數 Stage	減速比 Ratio	PNS-40	PNS-60T	PNS-80T	PNS-120T	PNS-160T
		3	125	11	35	95	215	473
			175	11	35	95	215	473
			225	11	35	95	215	473
			245	11	35	95	215	(Ratio 250) : 473
			315	11	35	95	215	(Ratio 350) : 473
			405	11	35	95	215	(Ratio 400) : 473
			567	10	28	85	200	(Ratio 500) : 473
			729	8	23	75	195	(Ratio 700) : 400
			1000	8	21	65	180	320
急停力矩 T_{2NOT} Emergency Stop Torque	N · m	2.5倍額定輸出力矩(2.5 times of Nominal Output Torque) (* 最大輸出力矩 Max. Output Torque T_{2B} =60% of Emergency Stop Torque)						
額定輸入轉速 n_{1N} Nominal Input Speed	rpm	1,2,3	3-1000	4000	4000	3000	2500	2500
最大輸入轉速 n_{1max} Max. Input Speed	rpm	1,2,3	3-1000	6000	6000	6000	5000	4000
標準背隙 Standard Backlash P2	arcmin	1	3-10	≦9	≦8	≦7	≦6	≦5
		2	15-100	≦12	≦10	≦9	≦8	≦7
		3	125~1000	≦15	≦12	≦12	≦12	≦10
扭轉剛性 Torsional Rigidity	N · m /arcmin	1,2,3	3-1000	1.2	3.5	8.5	17	30
容許徑向力 F_{2rB} [1] Max. Radial Load	N	1,2,3	3-1000	580	890	2050	4370	6720
容許軸向力 F_{2aB} [1] Max. Axial Load	N	1,2,3	3-1000	410	430	1100	2630	4200
使用溫度 Operating Temp.	℃	1,2,3	3-1000	-10℃ ~ +90℃				
使用壽命 Service Life	hr	1,2,3	3-1000	20,000(10,000 連續運轉 Continuous operation)				
效率 Efficiency	%	1	3-10	≧95%				
		2	15-100	≧90%				
		3	125~1000	≧85%				
重量 Weight	kg	1	3-10	0.5	1.1	2.8	6.3	15.6
		2	15-100	0.7	1.5/1.3	4.2/3.1	7.9	20.7/17.2
		3	125~1000	0.8	1.7	4.5	9.3	22.4
安裝方向 Mounting Position	-	1,2,3	3-1000	任意方向 Any direction				
噪音值 Noise Level [2]	dBA/1m	1,2,3	3-1000	60	63	66	67	68
防護等級 Protection Class	-	1,2,3	3-1000	IP65				
潤滑 Lubrication	-	1,2,3	3-1000	全合成潤滑油脂 Synthetic Lubricant				

減速機轉動慣量 Inertia(J1)

節數 Stage	減速比 Ratio	單位 unit	PNS-40(ψ8)	PNS-60(ψ14)	PNS-80(ψ19)	PNS-120(ψ24)	PNS-160(ψ35)
1	3	Kg · cm²	0.04	0.23	0.77	2.30	7.89
	4		0.03	0.21	0.67	1.92	5.83
	5~10		0.03	0.21	0.61	1.71	5.38
節數 Stage	減速比 Ratio		PNS-40(ψ8)	PNS-60(ψ14)/ PNS-60T(ψ8)	PNS-80(ψ19) / PNS-80T(ψ14)	PNS-120T(ψ19)	PNS-160(ψ35)/ PNS-160T(ψ24)
2	15		0.04	0.23/(0.04)	0.77/(0.23)	0.77	5.38/(1.61)
	其它比數 Other ratios		0.03	0.21/(0.03)	0.61/(0.21)	0.61	5.38/(1.61)
節數 Stage	減速比 Ratio		PNS-40(ψ8)	PNS-60T(ψ8)	PNS-80T(ψ14)	PNS-120T(ψ19)	PNS-160T(ψ24)
3	所有比數 All ratios		0.03	0.03	0.21	0.61	1.61

* 1. 輸出轉速 100rpm 時，作用於輸出軸中心位置。Applied to the output shaft center @100rpm.
* 2. 3000rpm 空載量測。Measured at 3000 rpm with no load. These values are measured by gearbox with ratio = 10 (1-stage) or ratio = 100 (2-stage) at nominal input speed or 3000 rpm (if nominal input speed is higher than 3000 rpm) with no load.

※本公司有權對以上數據規格逕行設計變更不先行告知。The above figures/specifications are subject to change without prior notice.

Products due to human error, natural disasters or other factors lead to poor or damaged, will not be covered under warranty.
產品因人為原因或天災等因素導致不良或損壞，不在保固範圍內。


SESAME
PNS
SESAME MOTOR

PGW SERIES

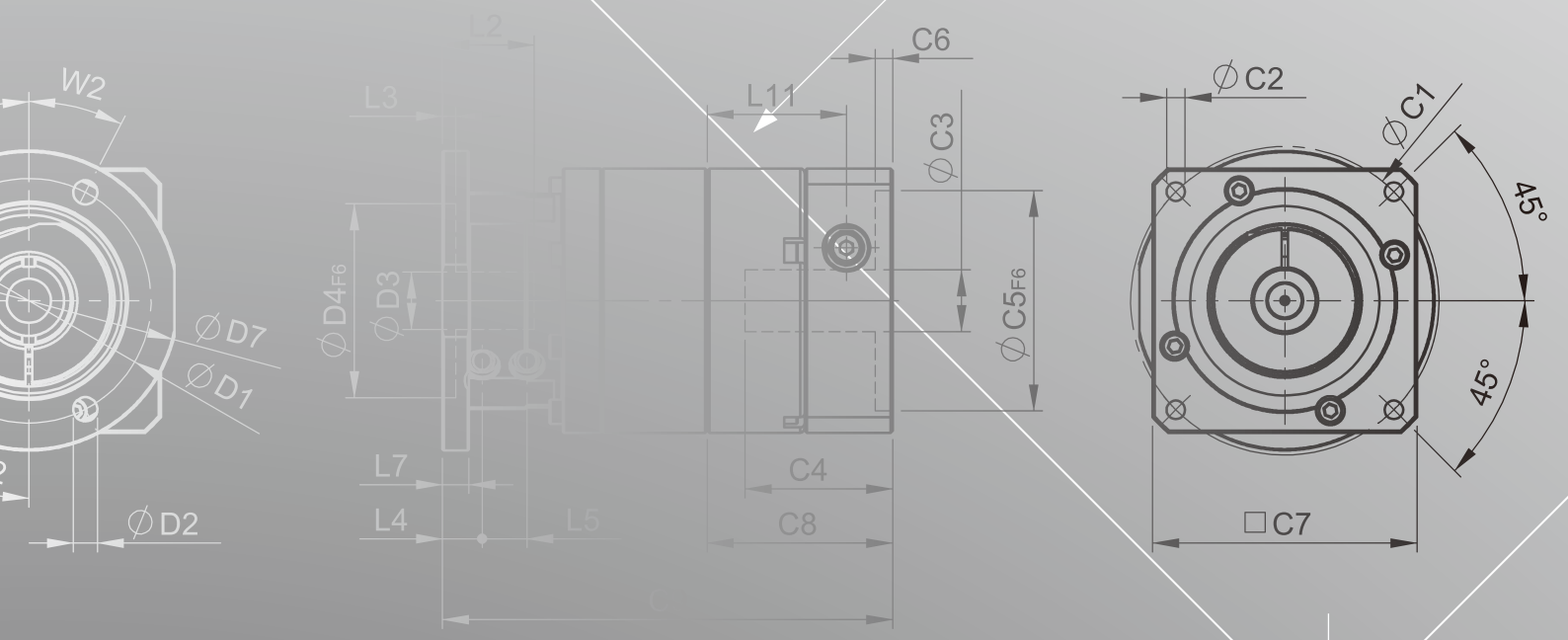
W2
ØD7
ØD1
ØD2
L2
L3
ØD4F6
ØD3
L7
L4
L5
L11
C6
ØC3
ØC5F6
C4
C8
ØC2
ØC1
45°
45°
□C7


W3
W2
W1
ØD7
ØD1
W2
ØD2
L2
L3
C8
C6
L11
ØC2
ØC1
45°
ØD4F6
ØD3
ØC3
ØC5F6
45°
L7
L4
L5
C4
□C7
C9
PGW60T/PGW90T
L2
L3
C8
C6
L11
ØC2
ØC1
45°
ØD4F6
ØD3
ØC3
ØC5F6
45°
C4
□C7
C9

PGW Single Stage Dimensions PGW單段外型尺寸圖

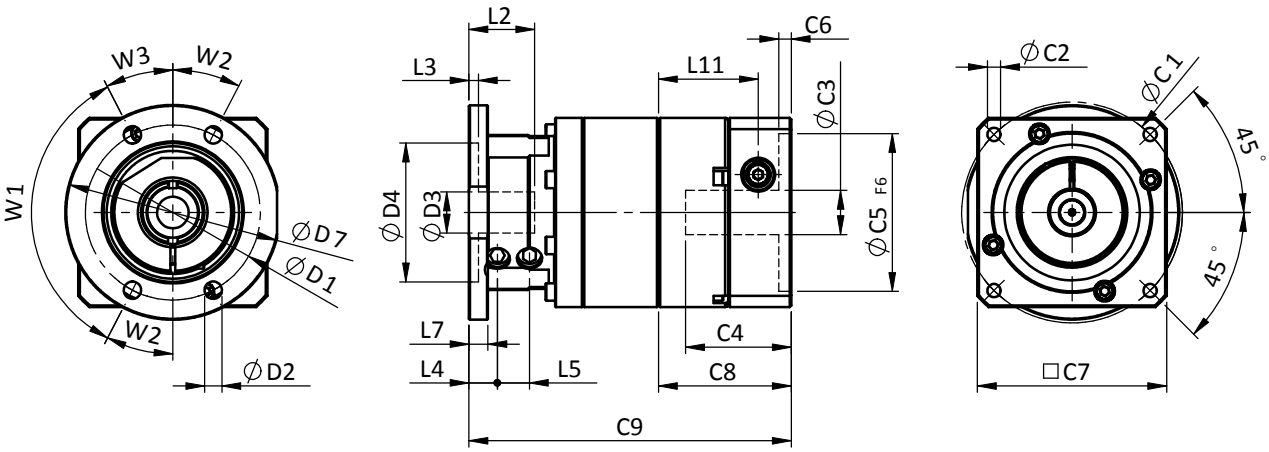

Specifications 規格

Unit:mm

尺寸 Dimensions	PGW60	PGW90	PGW115
D1	55.5	73	105
D2	5.5	5.5	6.6
D3	16	20	30
D4	44	60	80
D7	70	84	118
L2	31	31	37
L3	3.5	3.5	3.5
L4	9	10.2	12.5
L5	10.2	10.9	13
L7	6	6	10
L11	31.6	37.3	51.8
W1	125°	90°	90°
W2	27.5°	22.5°	22.5°
W3	27.5°	67.5°	67.5°
C1 [2]	70	90	145
C2 [2]	M5x0.8P	M6x1.0P	M8x1.25P
C3 [2]	≦14/≦19	≦19/≦24/≦28	≦24/≦32/≦38
C4 [2]	33.5	41	51.5
C5 [2] F6	50	70	110
C6 [2]	4	6	6
C7 [2]	60	90	130
C8 [2]	42.1	51.5	68
C9 [2]	102.2	126.5	172

★ C1~C9是公製標準馬達連接板尺寸,請依所選用的馬達決定.

★ 本公司有權針對以上數據規格逕行設計變更不先行告知.

★ C1~C9 are motor specific dimensions(metric std shown), Size may vary according to motor flange.

★ Specification subject to change without notice.

PGW Double Stage Dimensions PGW雙段外型尺寸圖

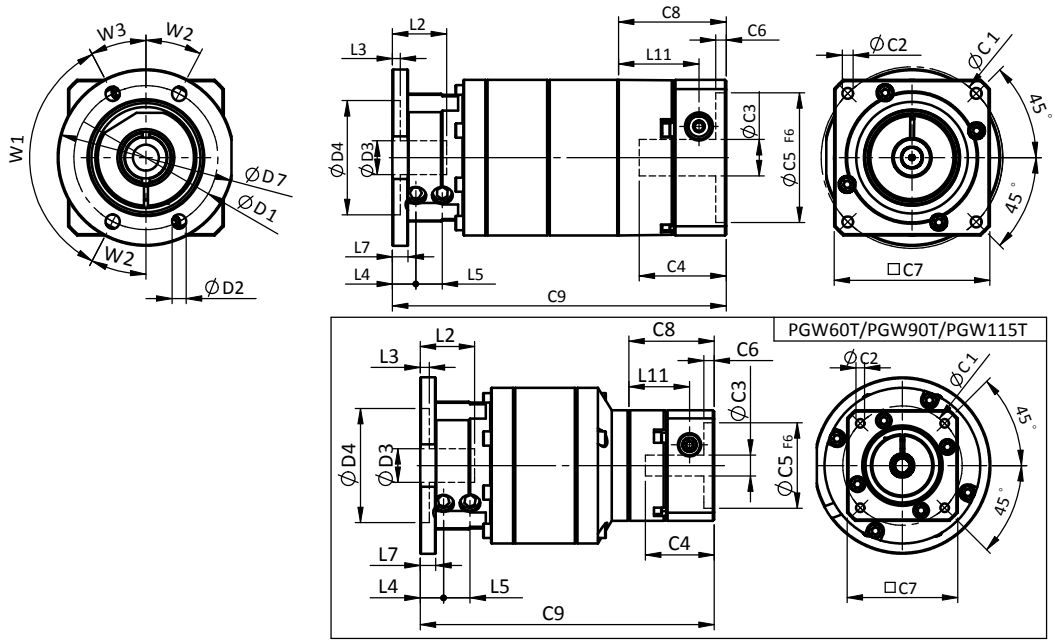

Specifications 規格

Unit:mm

尺寸 Dimensions	PGW60	PGW60T	PGW90	PGW90T	PGW115T
D1	55.5		73		105
D2	5.5		5.5		6.6
$D3_{h6}$	16		20		30
$D4_{g6}$	44		60		80
D7	70		84		118
L2	31		31		37
L3	3.5		3.5		3.5
L4	9		10.2		12.5
L5	10.2		10.9		13
L7	6		6		10
L11	31	23.4	37.3	31	37.3
W1	125°		90°		90°
W2	27.5°		22.5°		22.5°
W3	27.5°		67.5°		67.5°
C1 [2]	70	46	90	70	90
C2 [2]	M5x0.8P	M4x0.7P	M6x1.0P	M5x0.8P	M6x1.0P
C3 [2]	≦14/≦19	≦8/≦11	≦19/≦24/≦28	≦14/≦19	≦19/≦24/≦28
C4 [2]	33.5	26.5	41	33.5	41
$C5^{2}{}_{F6}$	50	30	70	50	70
C6 [2]	4	4	6	4	6
C7 [2]	60	42.6	90	60	90
C8 [2]	41.5	32.9	51.5	41.5	51.5
C9 [2]	128.6	113.3	160.3	145.8	193.6

★ C1~C9是公製標準馬達連接板尺寸,請依所選用的馬達決定.
★ 本公司有權針對以上數據規格逕行設計變更不先行告知.

★ C1~C9 are motor specific dimensions(metric std shown), Size may vary according to motor flange.
★ Specification subject to change without notice.

PGW Specifications Table PGW性能規格共表

規格 Specifications		節數 Stage	減速比 Ratio	PGW-60	PGW-90	PGW-115
額定輸出力矩 T_{2N} Nominal Output Torque	N · m	1	3	28	85	200
			4	32	80	215
			5	35	95	215
			7	28	85	200
			9	23	75	195
			10	21	65	180
		節數 Stage	減速比 Ratio	PGW-60/PGW-60T	PGW-90/PGW-90T	PGW-115T
		2	15	35/24	95/68	168
			20	35/31	95/95	215
			25	35/30	95/95	215
			35	35/28	95/95	215
			45	35/27	95/92	215
			50	35/27	95/82	205
			70	28/28	85/85	200
			90	23/23	75/75	195
			100	21/21	65/65	180
		節數 Stage	減速比 Ratio	PGW-60T	PGW-90T	PGW-115T
		3	125	35	95	215
			175	35	95	215
			225	35	95	215
			245	35	95	215
			315	35	95	215
			405	35	95	215
			567	28	85	200
			729	23	75	195
			1000	21	65	180
急停力矩 T_{2NOT} Emergency Stop Torque	N · m	2.5倍額定輸出力矩(2.5 times of Nominal Output Torque) (* 最大輸出力矩 Max. Output Torque T_{2B} =60% of Emergency Stop Torque)				
額定輸入轉速 n_{1N} Nominal Input Speed	rpm	1,2,3	3-1000	4000	3000	2500
最大輸入轉速 n_{1max} Max. Input Speed	rpm	1,2,3	3-1000	6000	6000	5000
標準背隙 Standard Backlash P2	arcmin	1	3-10	≦8	≦7	≦6
		2	15-100	≦10	≦9	≦8
		3	125~1000	≦12	≦12	≦12
使用溫度 Operating Temp.	℃	1,2,3	3-1000	-10℃ ~ +90℃		
使用壽命 Service Life	hr	1,2,3	3-1000	20,000(10,000 連續運轉 Continuous operation)		
效率 Efficiency	%	1	3-10	≧95%		
		2	15-100	≧90%		
		3	125~1000	≧85%		
重量 Weight	kg	1	3-10	1.2	2.9	6.4
		2	15-100	1.6/1.4	4.3/3.2	8.0
		3	125~1000	1.8	4.6	9.4
安裝方向 Mounting Position	-	1,2,3	3-1000	任意方向 Any direction		
噪音值 Noise Level [1]	dBA/1m	1,2,3	3-1000	63	66	67
防護等級 Protection Class	-	1,2,3	3-1000	IP65		
潤滑 Lubrication	-	1,2,3	3-1000	全合成潤滑油脂 Synthetic Lubricant		

減速機轉動慣量 Inertia(J1)

節數 Stage	減速比 Ratio	單位 unit	PGW-60(ψ14)	PGW-90(ψ19)	PGW-115(ψ24)
1	3	Kg · cm^2	0.23	0.77	2.30
	4		0.21	0.67	1.92
	5~10		0.21	0.61	1.71
節數 Stage	減速比 Ratio		PGW-60(ψ14)/ -60T(ψ8)	PGW-90(ψ19) / -90T(ψ14)	PGW-115T(ψ19)
2	15		0.23/(0.04)	0.77/(0.23)	0.77
	其它比數 Other ratios		0.21/(0.03)	0.61/(0.21)	0.61
節數 Stage	減速比 Ratio		PGW-60T(ψ8)	PGW-90T(ψ14)	PGW-115T(ψ19)
3	所有比數 All ratios		0.03	0.21	0.61

* 1. 輸出轉速 100rpm 時，作用於輸出軸中心位置。Applied to the output shaft center @100rpm.
* 2. 3000rpm 空載量測。Measured at 3000 rpm with no load. These values are measured by gearbox with ratio = 10 (1-stage) or ratio = 100 (2-stage) at nominal input speed or 3000 rpm (if nominal input speed is higher than 3000 rpm) with no load.

※本公司有權對以上數據規格逕行設計變更不先行告知。The above figures/specifications are subject to change without prior notice.

Products due to human error, natural disasters or other factors lead to poor or damaged, will not be covered under warranty.
產品因人為原因或天災等因素導致不良或損壞，不在保固範圍內。

SESAME

SESAME MOTOR CORP.

世協電機股份有限公司

台中市神岡區和睦路一段599號

599, Sec 1, Hemu Rd., Shengang, Taichung,

42953, Taiwan

TEL : +886-4-2561-0011

FAX : +886-4-2562-7766

www.sesamemotor.com

info@sesamemotor.com.tw

Skype Phone : sesame_motor

PLANETARY GEARHEADS

經銷商/AGENT

V.3.5