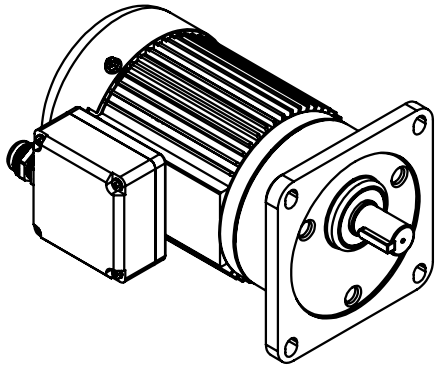

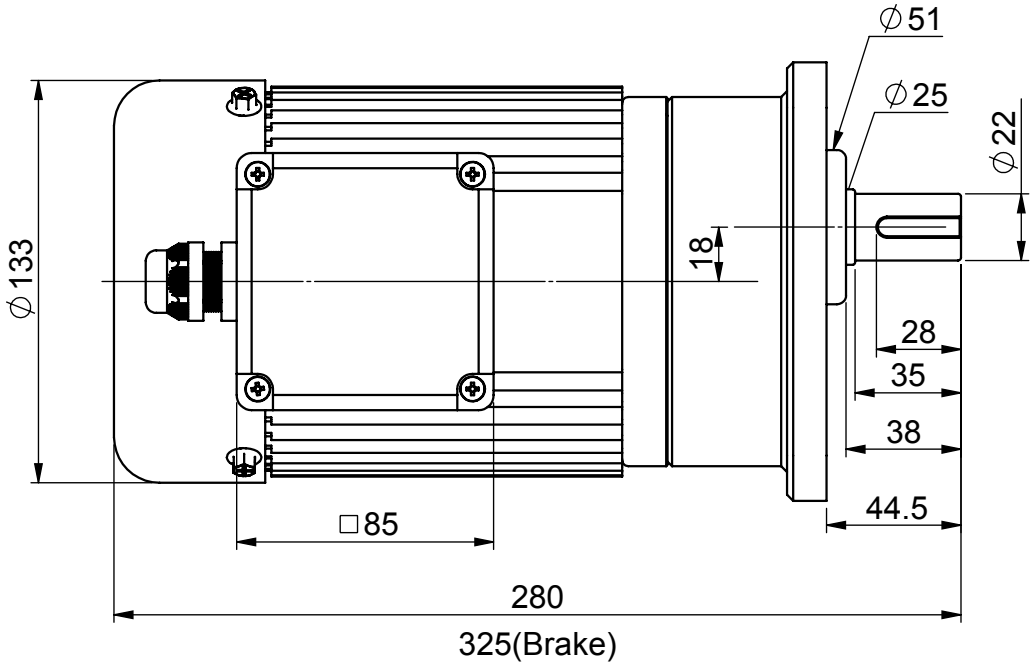

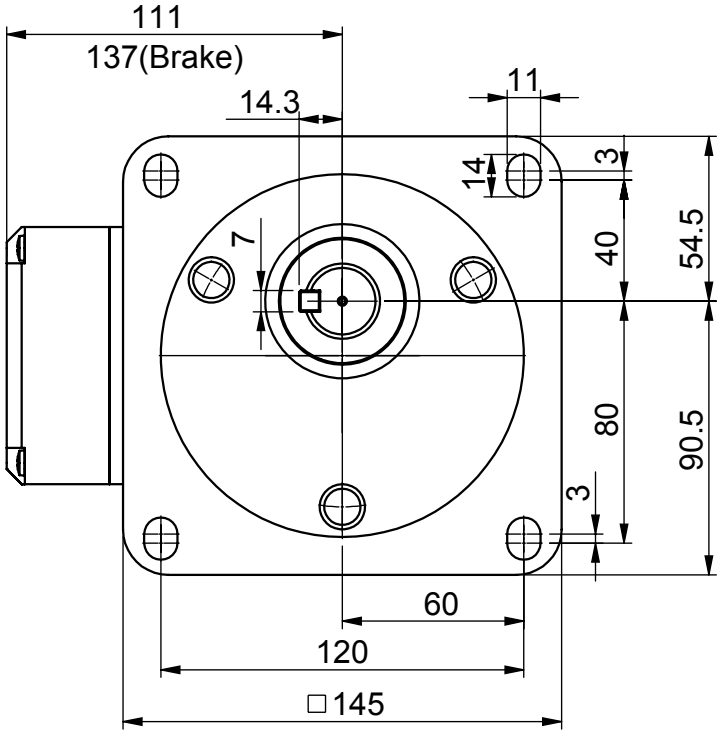

SPECIFICATIONS ARE SUBJECT TO CHANGE WITHOUT PRIOR NOTICE

Unit	mm	Model Name	GE11V-200W	SESAME MOTOR CORP.
Projection		Drawing No.	5BA2XXX100Z0	